Guardian

MODEL 21230L
Residential Garage Door Opener
for Sectional Garage Doors up to 10' high

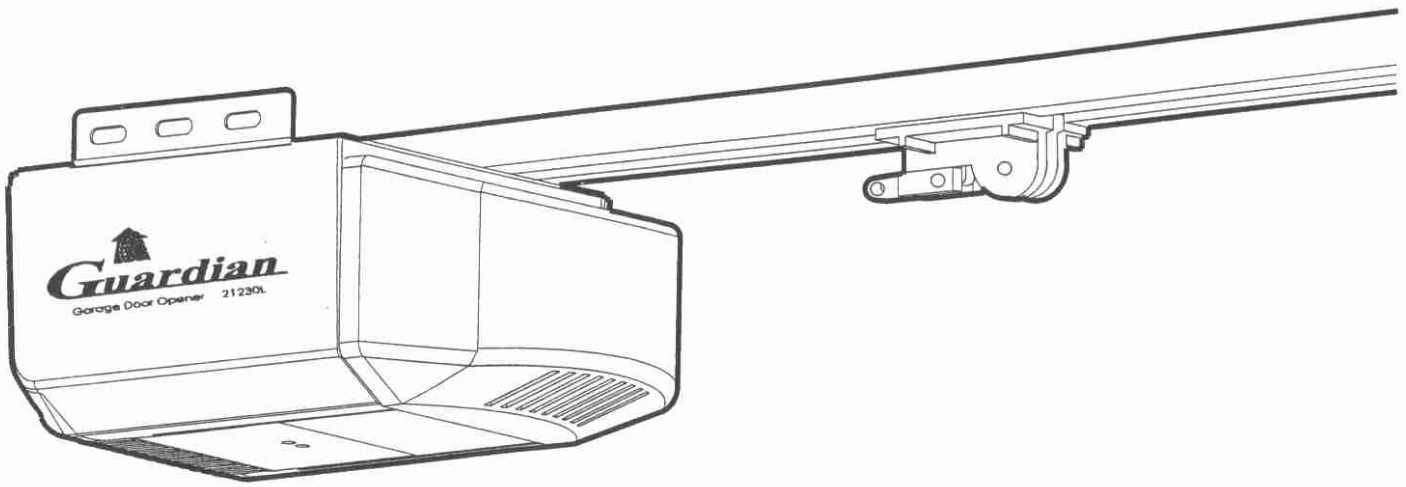

Installation Instructions
and
Owner's Manual

READ THIS MANUAL CAREFULLY BEFORE BEGINNING INSTALLATION

Installer: Place this manual in the plastic envelope provided and permanently attach to the wall.

GUARDIAN ACCESS CORP.

Limit Warranty
Residential Garage Door Opener and Remote System

Guardian Access warrants all components of its residential garage door openers against defects in material and/or workmanship to the original purchaser. Any parts, power unit, remote control system or complete garage door opener that fails during the warranty period will be repaired or replaced in accordance with the following provisions:

21230L Deluxe 1/2 Horsepower
Motor: Warranted to be free from any defect in material and/or workmanship for a period of 2 years from date of purchase.
Drive Train: ALL Mechanical parts to be free from any defect in materials and/or workmanship for a period of 2 year from date or purchase.
Electronics: All electronics parts to be free from any defect in material and/or workmanship for a period of 1 years from date of purchase.

If within the stated warranty period it is determined that a component is defective or that a component failed as a result of poor workmanship **Guardian Access** will repair or replace (**Guardian Access'** option) the component at no cost to the owner. Defective parts will be repaired or replaced with new or factory rebuilt parts.

To make claim under this warranty contact **Guardian Access** you will be instructed on how to proceed regarding replacement and repair.

This warranty is void when any component part fails because of damage from improper use, handling, faulty installation, faulty connection to an improper power source, failure to properly maintain, modification of unit, use other than on residential garage door and damage from fire, water or acts of God.

This warranty excludes all other warranties, expressed or implied, including any warranty of merchantability. **Guardian Access** shall not be liable for consequential or incidental damages that may arise from any defect or failure of the garage door opener. No person or representative is authorized to extend, modify or change the provisions of this warranty in connection with the sale installation or use of this product.

All labor charges for removal and re-installation of the door opener are the responsibility of the owner. **Guardian Access** shall not be responsible for the cost of any part, labor or service charge which is performed by any other person or entity at any time.

Batteries are not included in the warranty program.

Some states do not allow the exclusion or limitation or consequential or incidental damages. This Limitation is not valid in jurisdictions which do not allow limitation of incidental or consequential damages or limitation or warranty periods.

This warranty give you specific legal rights and you may also have other rights which vary from state to state.

Contents

Safety Instructions		03
Before Starting		03
Pre-Assembly Check		03
Product Features/ Specifications		04
Door Test		05
Tools Required		05
Component Identification & Inventory		06
Fastener Identification		06
Assembly Instructions		07
Installation Notes		08
Step 1	Mounting the Front Bracket	08
Step 2	Attach the Rail Assembly to Front Bracket	09
Step 3	Position the Power Head for Mounting Bracket	09
Step 4	Mounting the Power Head to Ceiling	09
Step 5	Recheck all Fasteners for Tightness	09
Step 6	Door Arm, Bracket and Plate Installation	10
Step 7	Check Emergency Release	10
Step 8	Installing the Push Button	11
Step 9	Install the Bulb	11
Step 10	Connect to Power	11
Step 11	Setting / Changing Transmitter Codes	11
Step 12	Installation of Photo eye system	12
Final Alignment and Test		13
Operation and Adjustment Instructions		14
Setting the Limits		14
Setting the Sensitivity Force		15
Testing the Openers Reversing System		16
Testing the Photo eye system		16
Final installation		17
Trouble Shooting		18
After the Installation		19
Parts Breakdown		20
Warranty		22

NOTICE

21230L Series Garage Door Openers are designed and tested to offer safe operation, Provided installation and use of this product is followed in strict accordance with these instructions for assembly and installation. Failure to comply with these instructions could cause property and/or bodily injury. The opener is intended only for the use described in this manual and use other than intended will void any and all warranties herein described.

Read and Follow These Important Safety Instructions

You will see **Warning** and **Caution** statements on the following Pages.
Read and follow these safety instructions carefully. Failure to do so could result in serious personal injury or death.



Warning means that severe injury or death may result from failure to follow instructions

Caution means that property damage or injury may result from failure to follow instructions

- Be sure to read and follow all instructions carefully.
- To reduce the risk of electric shock, this equipment has a grounding type plug, that has a third (grounding) pin. This plug will only fit into a grounding type outlet. If the Plug does not fit into the outlet, contact a qualified electrician to install the proper outlet. Do not change the plug in any way.
- Check to make sure the garage door is properly installed and balanced. Because of the extreme tension most garage door parts are under do not attempt to adjust on your own. Have a qualified garage door service person make repairs to cables, spring and other hardware before installing the opener.
- Install Entrapment Warning Label next to control button. Read the Control Adjustment Warning Label. Install Emergency Release Tag to the Emergency Release Cord. Mount the Emergency Release Knob 6 feet from the floor. Use the manual release Only to disengage the trolley. Do not use the Red Release Cord and Knob to pull door up or down. If possible, use the Emergency Release only when the door is closed.
- Do not connect opener to power source until instructed Install door opener 7 feet or more above floor.
- After installing opener, the door must reverse when it comes in contact with a 1-1/2" high object. Check this safety feature often.
- Remove all ropes connected to the garage door.
- Disengage all existing garage door locks to avoid damage to the garage door.
- Fiberglass, Aluminum and Steel Doors must be Reinforced to Prevent Damage. Consult with Manufacturer for Recommendations.
- All installation and wiring must be done in strict compliance with local and state building and electrical codes. Connect the power cord to a properly grounded outlet only. Do not in any way alter or remove the grounding pin. Photo Electrical Eyes must be installed properly. Opening doors must not close and Closing doors must open. See test procedure page 12 and page 13.
- Locate lighted push button within sight of garage door, away from all moving parts and out of reach of children (minimum 5' above floor). To reduce the risk of injury to persons, to use this operator only with a sectional door.
- Never operate the opener if the system is not operating properly.
- Always disconnect electric power before making repairs or removing cover.
- Activate opener only when the door is in full view and free from obstructions.
- No one should enter or leave the garage while the door is moving. Do not allow children to play near, or operate the door. Keep the remote control away from children.
- After Installation is complete fasten this manual near the garage door. Perform periodic safety checks and recommended maintenance and adjustments.

Product Features

1. Motor: Permanently Lubricated, thermally protected, heavy duty motor with Automatic reset.

2. Opener Lights: Turn on and off automatically with 2-1/2 minutes illumination for your safety and convenience.

3. Sensing System: A built-in sensing system detects obstructions during door operation. If in the Downward (close) travel mode, the Opener will sense an obstruction and reverse to the full open position. In the Open mode, the Opener will stop. In both cases the light will start flashing and continue to flash for 30 seconds. Since all doors are different, the Sensing System has independent adjustments for customizing the level of force for the normal opening and closing of specific door.

4. Close Limit Switch: In winter months it's common for small pieces of ice or packed snow to be trapped under the door. Ground swelling may also effect the close limit setting of the Opener. The Close Limit Switch overrides the Sensing System under the last one (1) inch of closing travel and prevents the door from reversing if it encounters an obstruction at this point. When the Light flash at the door close position, it's about time to shovel the snow or re-adjust the close limit higher.

5. Emergency Release: A pull cord allows manual disconnect and operation of door during power failure. Unit will automatically reconnect when release is reset (the trolley release lever is snapped back to its original position), power is restored and Opener is activated.

6. Mechanical Door Lock: When properly adjusted, opener locks door in closed position preventing unwanted entry.

7. Easy Connect Continuous Monitor Entrapment System: System allows quick and easy installation of "Silent Guard" Photo eye system (Optional) while control circuitry monitors these devices continuously for proper operation.

8. Constant Contact to Close: For utmost safety if "Silent Guard" Photo eye system (Optional) fails constant contact of mechanical push button is necessary to close door. In this mode of operation, a radio transmitter cannot be used to close door.

9. Momentary Contact to Close: Single touch to Radio Transmitter or Wall Button will allow door to close as long as Silent Guard Photo eye system (Optional) is operational.

10. Silent Guard Photo eye system (Optional): An invisible infra-red beam of light guards the door opening and reverses a downward moving door if the beam is broken by a stationary or moving object. If the beam is broken, the opener light will flash for 30 seconds. Motor control circuitry constantly monitors the Silent Guard Photo eye system for proper operation.

11. Digital Radio Control: Built in allowing over 1.6 million private codes, easily selected without use of tools. Bright transmitter LED indicates operation and monitors battery condition.

Door Test

Before beginning installation of the operator please complete the following test to insure that your door is balanced and in good working condition. A poorly balanced door could cause severe personal injury and damage to the opener.
Always have a qualified garage door service person make any needed adjustments and/or repairs to your door before proceeding with installation.

Sectional Door

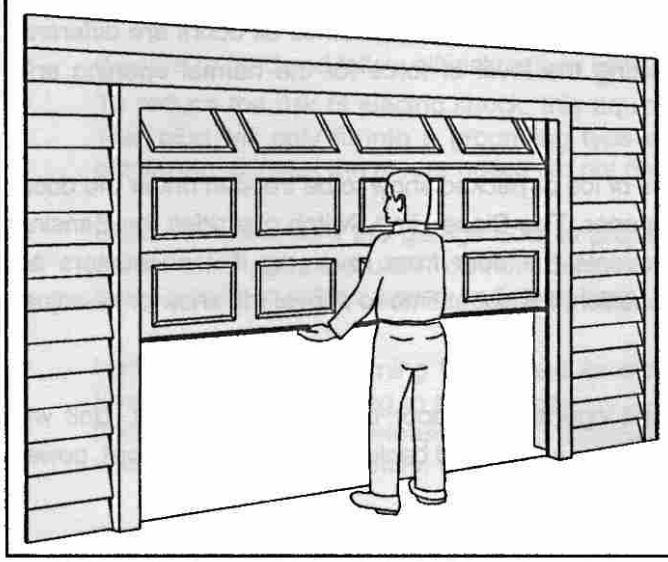

1. Raise and lower the door and check closely for areas of sticking and binding. Check for loose hinges, wobbly rollers, frayed cables and damaged or broken springs. Contact a qualified garage door service person to make the necessary adjustments.

2. Lift the door approximately halfway. When released, the door should stay in that position. If door pulls open or moves downward, the spring mechanism is not adjusted properly. Contact a qualified garage door service person to make the necessary adjustments.

3. When properly installed and adjusted the door will remain clear of the opening, when allowed to rest at its natural full open position. If door drifts up or down the door is not adjusted properly. Contact a qualified garage door service person to make the necessary adjustments.

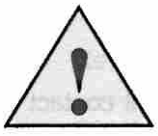

Do not install the opener until these adjustments and repairs have been made.

Carefully follow the instructions for the assembly and installation of the garage door opener contained in this manual

Tools Required for Assembly and Installation

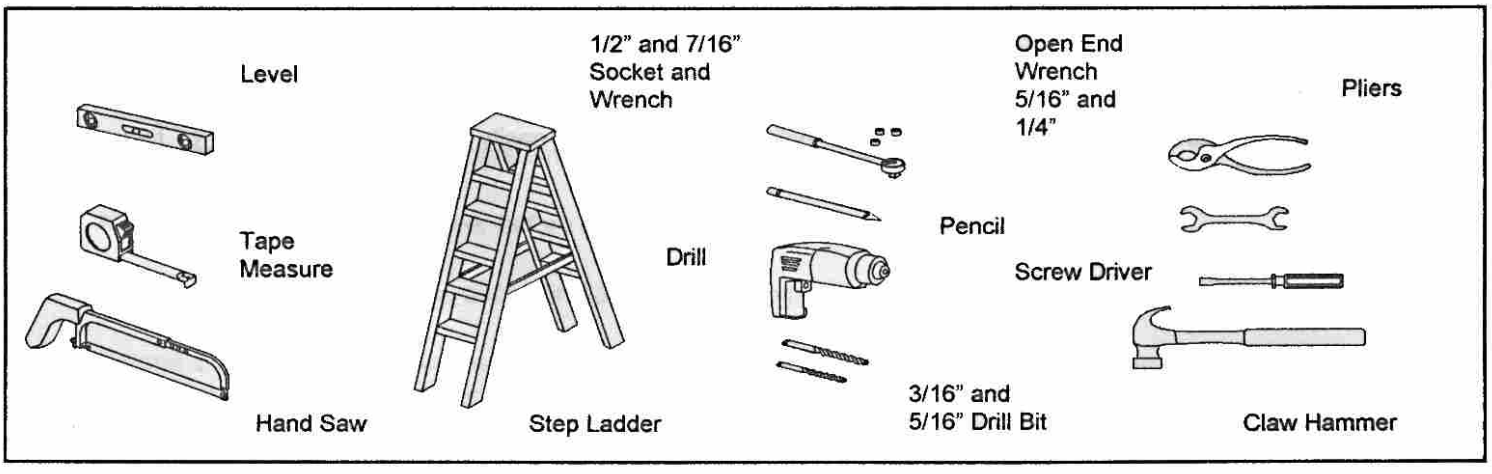

Components Identification and Inventory

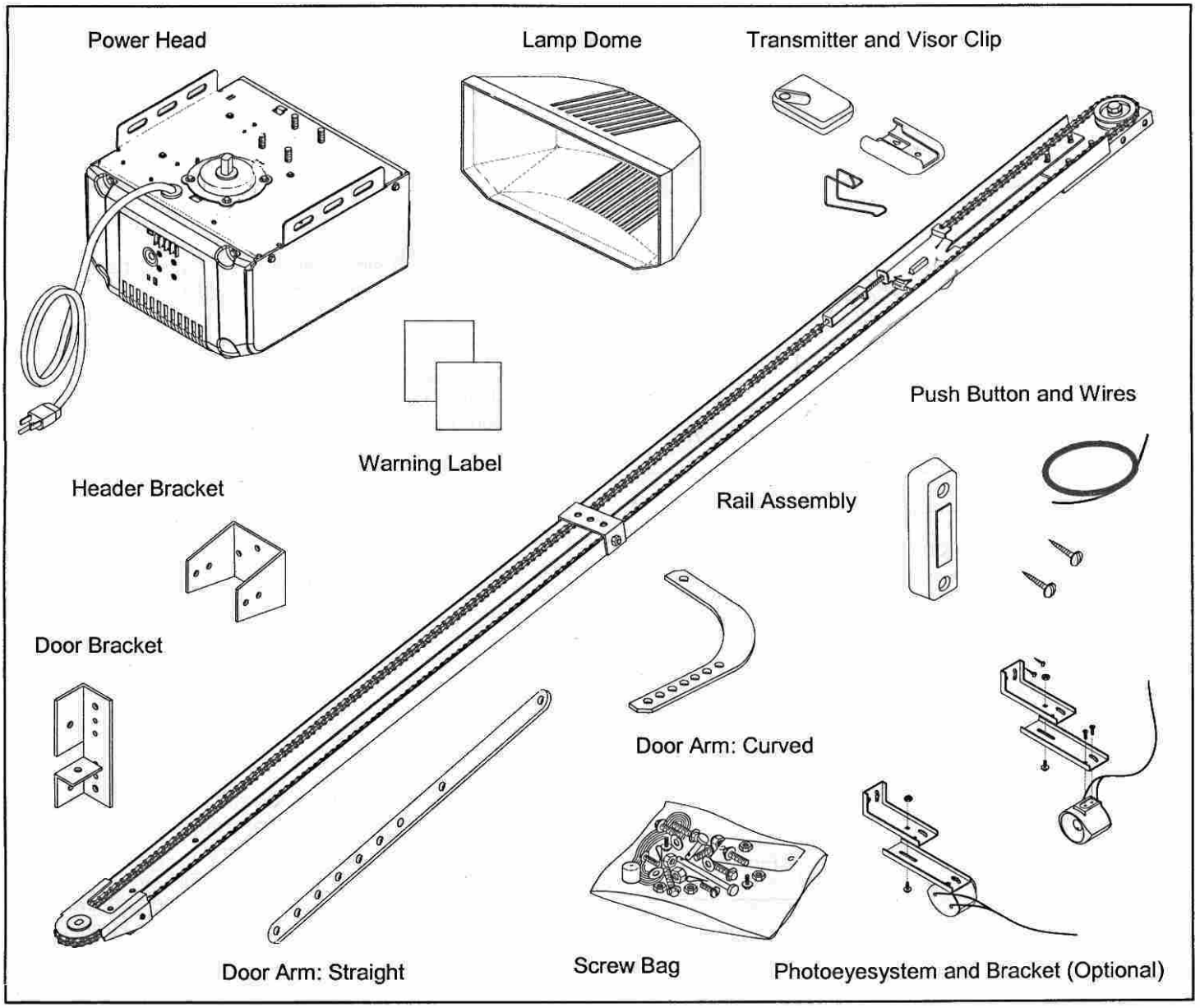

Fastener (parts in screw bag) Identification

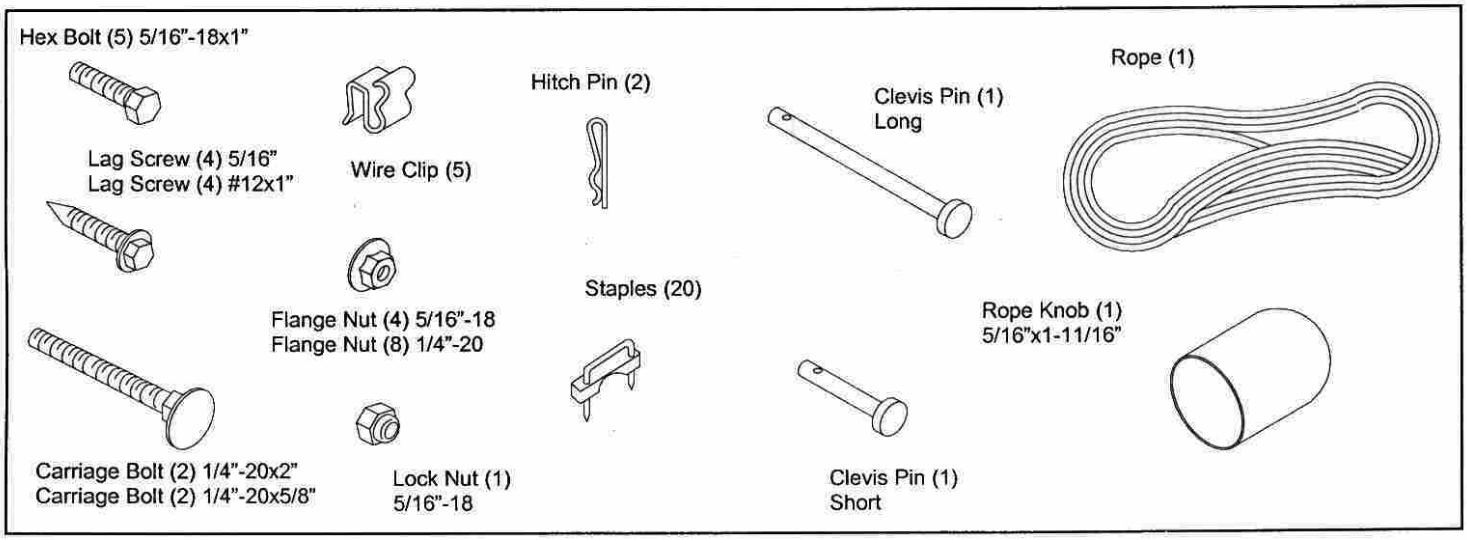

Assembly

Note: The L-Rail/Chain Speed Unit Assembly with Trolley and Front Idler Sprocket is packaged separately from the Power Head Unit. Refer to Page 6 for package contents and identification.

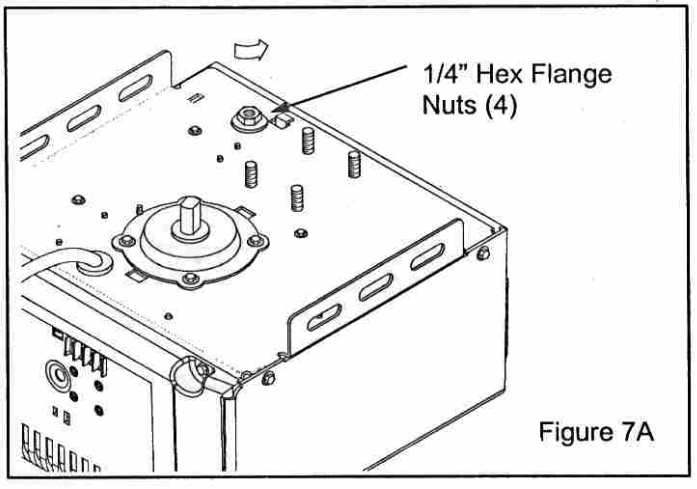

Figure 7A

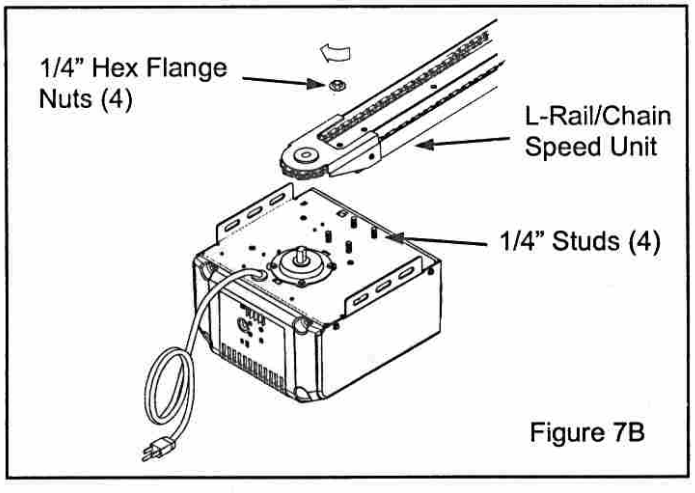

Figure 7B

Figure 7C

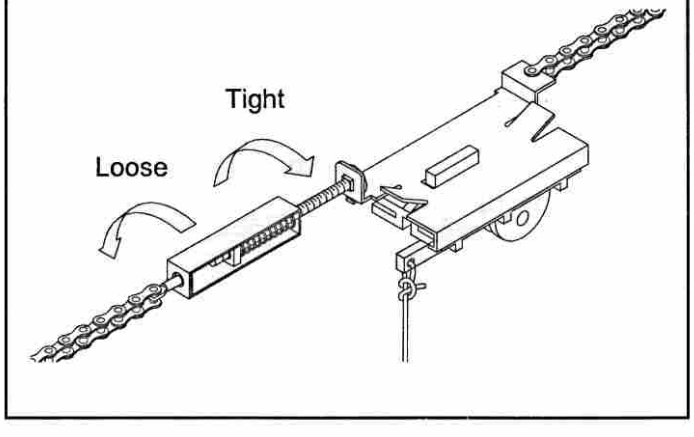

Step 1.
Place Power Head Unit on discarded packing material/ cardboard.

Step 2.
Remove L-Rail/Chain Speed Unit from box. Locate Installation Hardware Package.

Step 3.
Since L-Rail/Chain Speed Unit comes pre-assembled from factory, simply position L-Rail/Chain on top of the four (4) 1/4" studs on the Power Head Unit Chassis (See figu 7B), Secure with nuts and washer removed in Step 1.

Step 4.
Check chain tension. When adjusted properly, the chain should show no drop and be approximately 1/2" above the base of L-Rails. If necessary, slowly apply or release tension to the chain by turning the Chain Tension Bracket (See Figure 7C). Make sure the chain does not twist and re-check chain alignment at drive sprocket and front idler.

Note: Improper chain adjustment (too loose or too tight) can result in improper operation and/or excessive aprocket and chain noise.

Step 5.
Re-check all nuts for tightness.

Assembly is now completed. You are ready to begin installation of the opener.

Installation

Installation procedures will vary depending on type of garage door.
Identify your garage door from those illustrated below and follow procedure outlined for your type of door.

To determine high point of door. Raise the door slowly, until it reaches its highest point of travel. Place support block under the door and measure the distance from the floor to the top edge of the door. Remove block and lower door.

Figure 8A

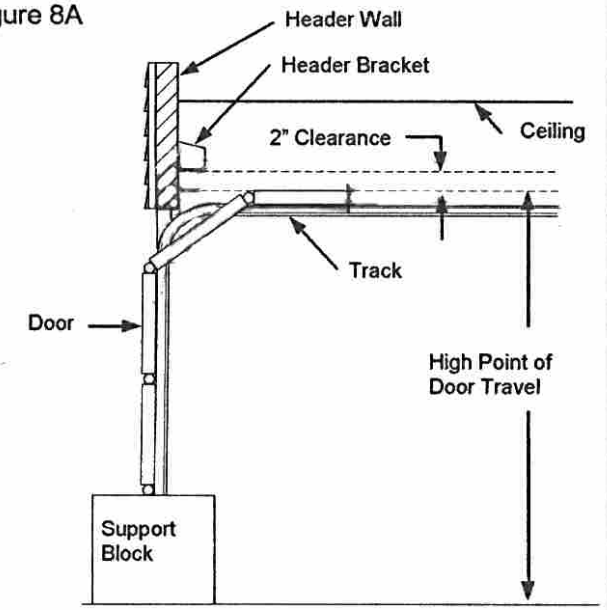

Sectional Door with Curved Track



Springs, Pulleys, Cables and Mounting Hardware that balance your garage door are under tremendous pressure at all times and can cause serious injury or death if disturbed. Do not attempt adjustment!

Figure 8B

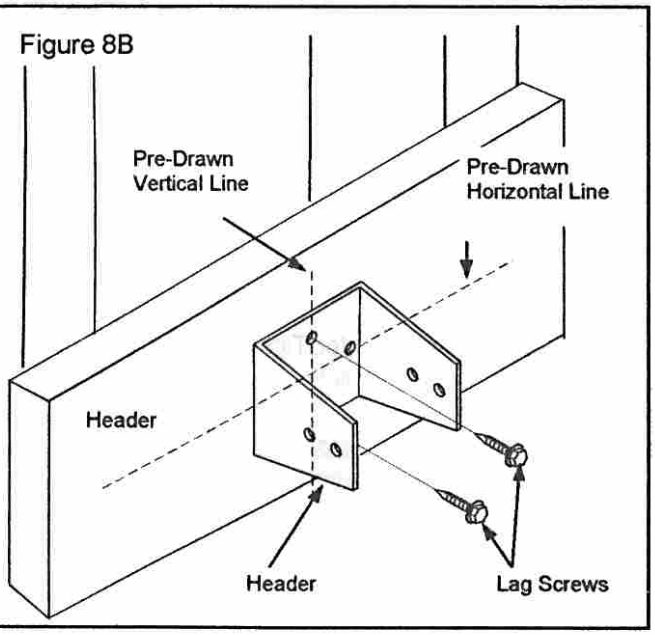

Step 1.

Mounting the front Bracket
Mark a vertical centerline on the header above the door. By manually raising the door, determine the high point of the doors travel (see figure 8A) and using a level, transfer this measurement to the header (See figure 8B) Draw a horizontal line, crossing the previously drawn centerline, at this point. Install the front Mounting Bracket securely with lag screws as shown below. If necessary, reinforce the header with steel or wood to ensure a secure mount.

Installation

Warning: Fiberglass, Aluminum or Lightweight Steel Doors Will Require Reinforcement before installation of door mounting brackets. Contact your door manufacturer for a reinforcement kit or instructions. Failure to properly do so may result in severe door damage.

Note: Reinforcing may affect the balance of your door. Check for proper manual operation after installation. If necessary have your door re-balanced by a qualified garage door service person.

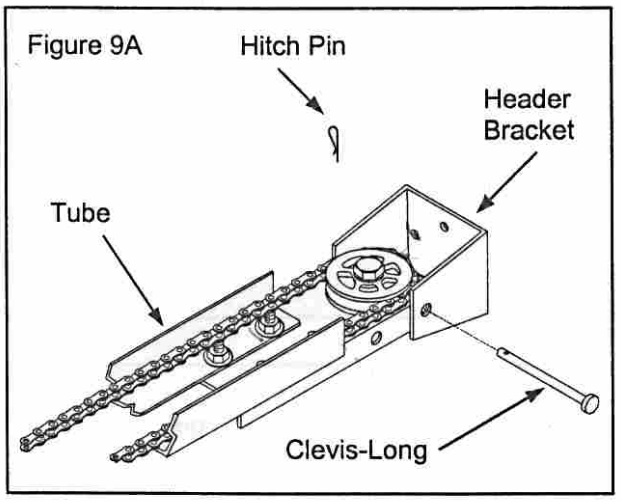

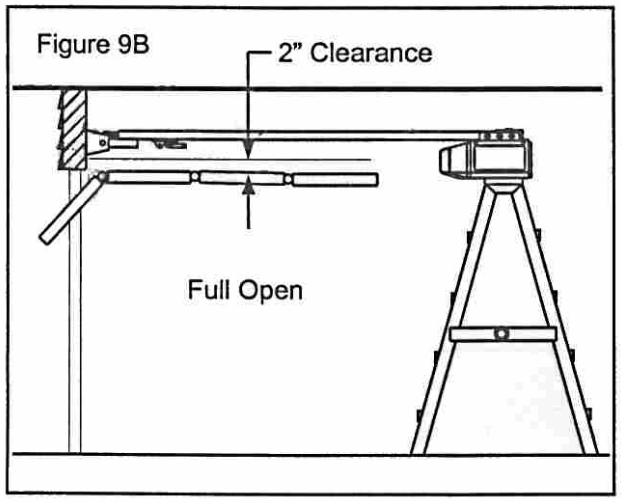

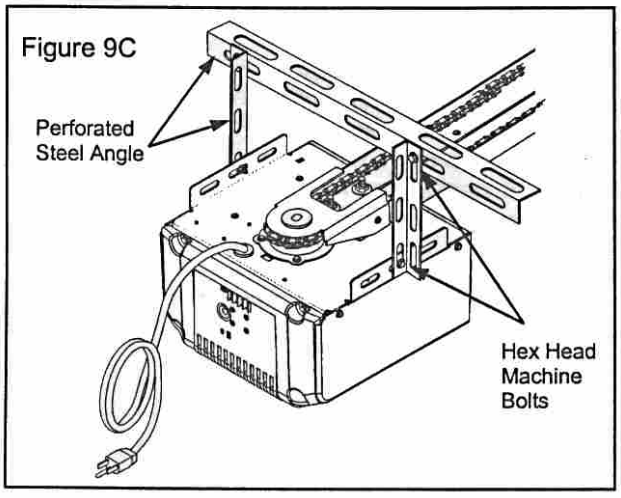

Step 2.

Place the power unit on the floor (use cardboard packing material for protection) and raise Mounting Bracket align. Insert 5/16 x 2-3/4" Clevis Pin and Hitch Pin. See Figure 9A.

Step 3.

Raise the opener and rest the power unit on a ladder or other support. Open the door to the full open position. Allow 2" of space between the rail and the door. See Figure 9B.

Note: Since the opener will be secured permanently in this position, open and close the door a few times to be sure the door does not rub on the rail and that you have allowed the proper clearance before proceeding.

Step 4.

Mount Power Head to Ceiling:

Since there are many different ceiling designs, all possible mounting illustrations can not be shown. Primary concern is to secure the power head to the ceiling so that operational strength, rigidity and safety are achieved. The opener must be securely fastened to a structural support of the garage. Although there are a series of mounting holes provided on the power unit, try to secure the mounting hangers to the slots closest to the front. Mounting may usually be accomplished by using standard 1-1/4" perforated steel angle available at most hardware stores or from your local garage door service person. If in doubt as to location of, and attachment to, ceiling joists, a carpenter should be contacted to provide assistance. A cross support will be necessary if power head is mounted 8" or more from the ceiling. See figure 9C.

Fasteners Supplied: 2 ea. 5/16-18x 1-7/8 Lags, 4 ea, 5/16 - 18 x 1-1/8" Hex Blots with Lock Washers and Nuts.

Step 5.

Re-check all Lags, Nuts and Bolts for Tightness.

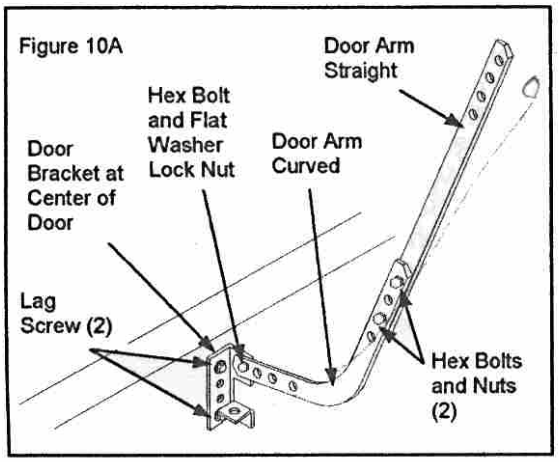

Step 6.

Door Arm, Bracket and Plate Installation:
Install the door mounting bracket on center and even with the top set of rollers on the door as illustrated Figure. 10A. (Fasteners Supplied: 2 ea. Lag Screw. Connect the straight door arm section (single hole section) to the trolley using a 5/16 x 1" Clevis pin and clip. The door arm must pivot freely. Connect the two Door arm so that it leans toward the power unit as illustrated fig. 10B. Do not install the door arm so that is straight up and down when the door is closed or the emergency release will not function properly. Now attach Door Arm to Trolley using 5/16" x 1" Clevis pin and clip.

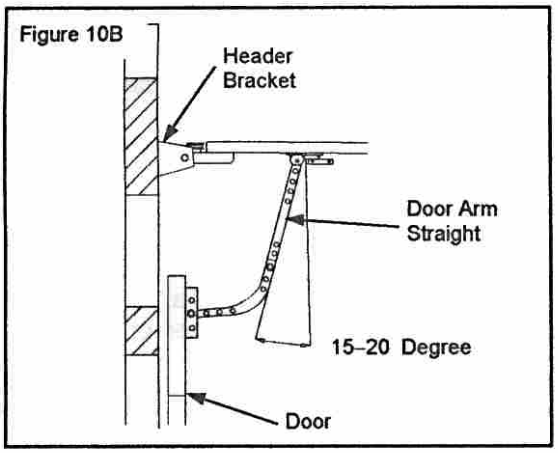

Step 7.

Tie a double overhand knot in one end of the Emergency Release Rope and slip the other end through the Red Release Knob, the Release Instruction Card and the hole at the end of the Release Lever on the Trolley (Please take time now to read and familiarize yourself with the instructions on the Emergency Release Label) Figure 10C. Tie a second double overhand knot in the free end, adjusting the Rope so that the Red Knob is 2M. above the floor. If the Rope must be cut, flame seal the cut end with a match or lighter to prevent fraying or unraveling.

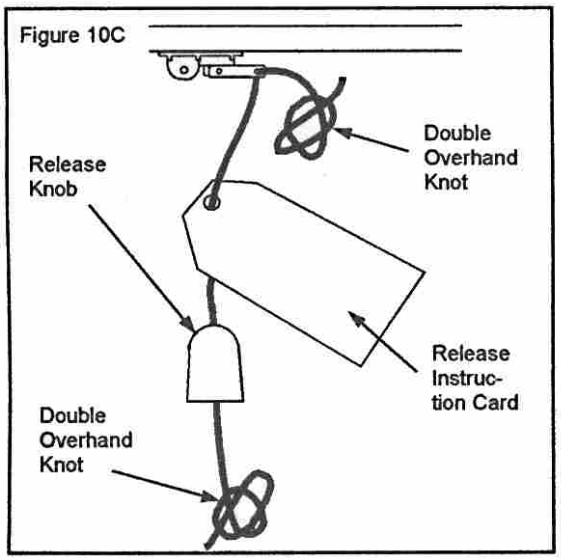

Note: The Emergency Release Mechanism is engaged by pulling the Release Knob down and towards the door, allowing the Trolley Mechanism to separate freeing the door. To re-engage simply move the Emergency Release Mechanism Lever upwards and operate the Opener using the push button or Transmitter. The two parts will automatically reconnect.

Note: This operation should be attempted only when the door is fully closed. Disconnection when open or partially open can cause the door to close quickly and cause personal injury or damage to the door.

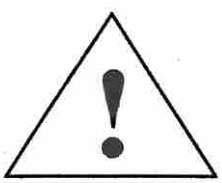

Use Manual Release Rope to Disengage Trolley Only. Do Not Use the Rope and Knob to Pull the Door Open or Closed

Warning: A Child Operating the Door Controls Risks Injury - Or Death to Himself and to Others. Do not Allow Children to Operate Any Door Controls. Mount the Push Button at Least 1.5 M from the Floor Out of Reach of Children

Warning: Improper Door Operation can Cause Injury or Death. Caution Label Must Be Mounted on Wall Near The Push Button. All Warnings Should Be Strictly Adhered To.

Figure 11A

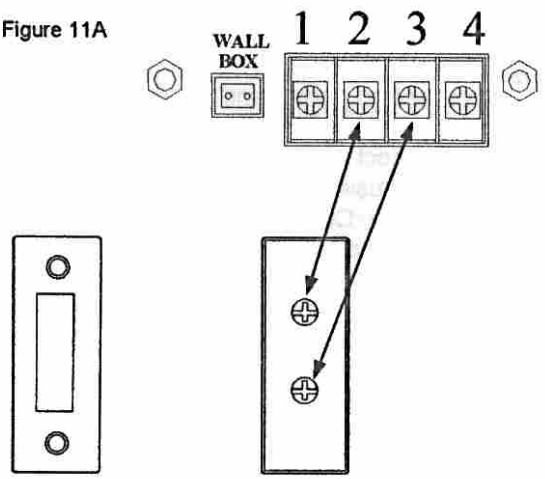

Step 8:

Installing the Standard Wall Push Button

Remove about 6mm of insulation from both ends of the 2 strands low voltage bell wire. Connect one end to both screw terminals on the back of push button. Select a convenient place near an access door, 1.5M ft from the floor and out of reach of children, for mounting. (2) Screws supplied. Run bell wire up the wall and across to the opener. Secure with insulated staples. Attach to Terminals 2 & 3 Figure 11A.

Warning: Installation & Wiring Must Be in Compliance with Local Electrical and Building Codes. Operation at other than 240V 50Hz Will Cause Opener Malfunction and Damage.

Figure 11B

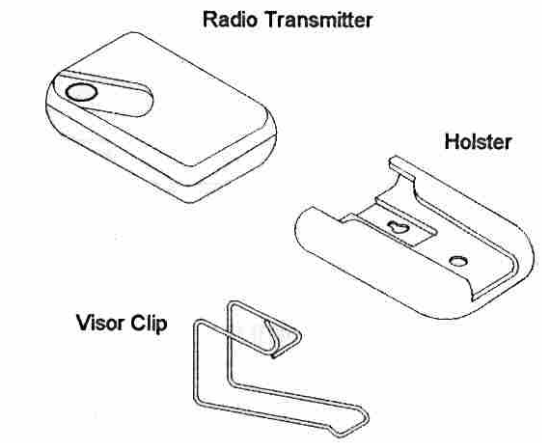

Step. 9

Opener Must be permanently wired or plugged into a grounded 3-prong receptacle wire according to local codes, within 1M of the Power Unit. A GFI Type Receptacle 14 Ga. or heavier is Recommended. Do Not Use a 2-prong adapter or Extension Cord.

Step. 10

Install a 60 watt Rough Service Bulb (available at most hardware stores) firmly in the light socket. Light bulbs in Door Openers are subject to vibration during normal operation which may shorten their life span. Fit Light Lens Cover and snap into place.

Step 11

Setting Personal Transmitter Access Codes.

Your Opener contains a built in Receiver

Figure 11C

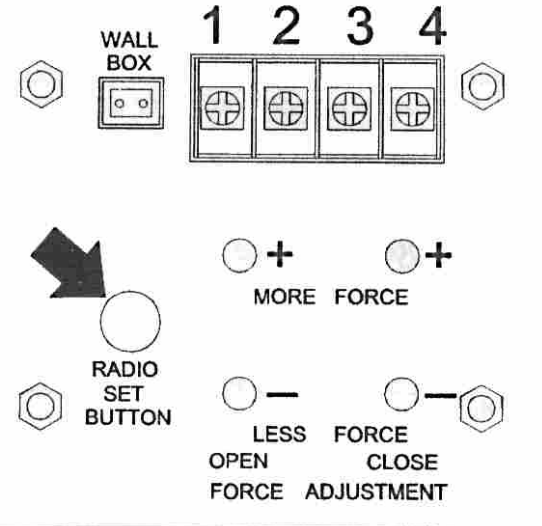

To set Receiver:

With a pointed object push the button shown in figure 11C. If the courtesy light is off it will come on and stay on for 30 seconds. If the courtesy light is on it will flash once and then stay on for 30 seconds. During this 30 second time period push the round button on a transmitter (figure 11B) until the courtesy light flashes twice this will indicate that the receiver has accepted the code of the transmitter. If the code is not accepted the courtesy light will stay on for 30 seconds, flash 4 times and then stay on for 2 1/2 minutes. Up to 20 transmitters (including wireless keypad) can be programmed into the receiver in this way by repeating the process. Each transmitter has its own code set at the factory. If you enter more than 20 transmitters the oldest transmitter will be dropped from memory and the new transmitter will be added. To delete all transmitters from memory hold the receiver set button in for 5 seconds. The courtesy light will then flash 7 times, indicating all transmitters have been cleared from memory.

Installation

Your Garage Door opener may supplied with an Auxiliary Entrapment System (Optional). Please Read The Following Carefully.

Important: The Opener will not operate until the Silent Guard Photoeyesystem is installed, properly aligned and connected.

The Beam must not be obstructed in any way. If obstructed the door can only be closed by applying constant pressure to the wall button only. The Transmitter cannot be used to close the door.

Warning: A Garage Door without an Auxiliary Entrapment Protection System Poses a Threat of Injury or Even Death. Install the Photoeyesystem No Higher than 100-150mm Above the Floor To Reduce All Risk to Children
Risk of Entrapment. Disconnect Power to the Opener Before and During Installation of This Accessory. Do Not Reconnect Power to Opener Until Instructed To Do So. Ensure Doorway is Clear Before Starting Testing of Unit.

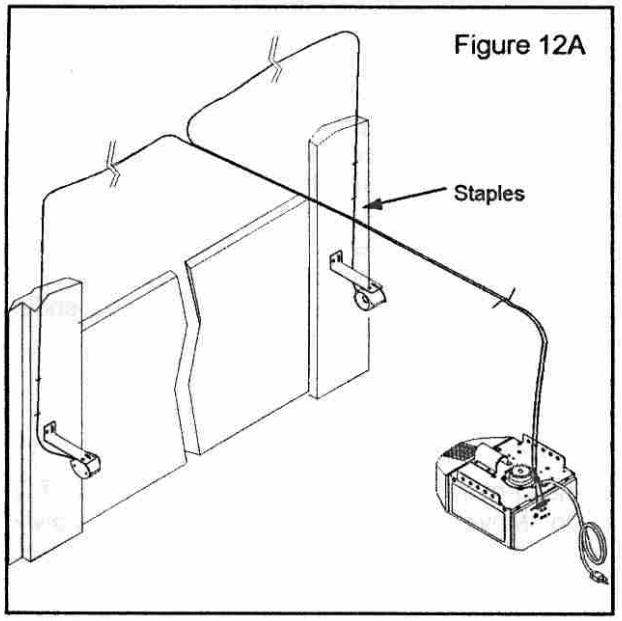

Figure 12A

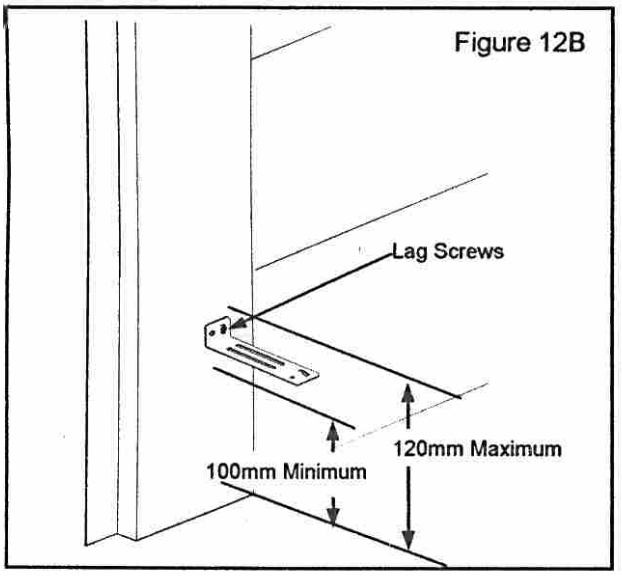

Figure 12B

Step 12

Installation of Silent Guard Photoeyesystem

A. Mark the position of the Silent Guard Photoeyesystem as follows:
Mark a line on the left and right door jamb (as close as possible to the door track) 100 and 150mm above the floor (See Figure 12B). The top mark is the maximum height and the bottom the minimum height that the Silent Guard Photoeyesystem may be placed.

B. Mounting the Silent Guard Photoeyesystem L Brackets:

1. Remove the two L mounting brackets, the Receiver Unit (with red LED and two 2 wires) and the Transmitter Unit (Single Wire) from the package.
2. Using either the transmitter or receiver (LED up towards the ceiling) temporarily attach to the L bracket with the two (2) M4x6mm Phillips Head Screw provided, hand tighten only, and move the Unit in between the limit marks on the door jamb (Step 12A). Continue to move the assembly within the limit marks until it clears the door hardware. Check to ensure the Window on the front of the Photoeyesystem Unit is within the limit marks on the door jamb.
3. Place a mark in the center of the lag screw elongated mounting hole. Measure its position and place a similar mark on the opposite door jamb. Remove Receiver/ Transmitter from L Bracket. Temporarily mount the bracket to the jamb with the 1" flat head wood screw using the small hole above the slot. Using the 5/16"-18 x 1-7/8" lag screws (provided), permanently mount the L

C. Connecting the "Silent Guard Photoeyesystem

1. Re-attach the transmitter and receiver to their L mounting brackets (Hand Tighten Only)
2. Run the interconnect white wire pair up and around the garage door jamb between the transmitter and receiver L mounting brackets. See Figure 13A Note: Wire can be cut, trim to length (leave about 6mm of extra wire) and reattached the excess wire may be just coiled and left. Please make sure that wire is free and will not be caught in the door track.
3. Run a. the second interconnect wire pair from the receiver position (unit with LED light in front) back to the rear of the opener. NOTE: leave about 300mm of extra wire at the opener end.

Figure 13A

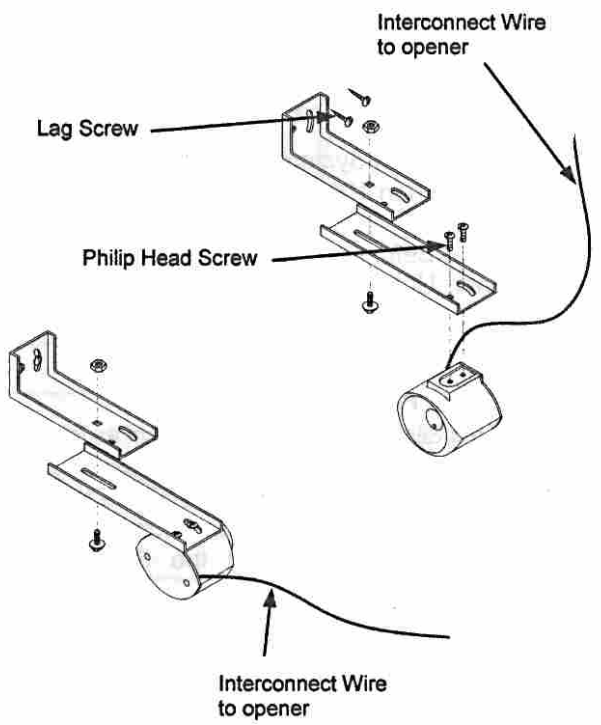

C. Connecting the "Silent Guard Photoeyesystem (continued)

4. Strip approximately 6mm from each wire end.
5. Connect the interconnect wire pair from the receiver to the opener terminals marked 1 & 2 as follows. (See Figure 13 B).

D. Final Alignment and Test

1. Connect the power to the opener. The light on the Opener will flash for 5 seconds indicating power has been restored to the unit. Keep a portable transmitter with you to control the opener.
2. Loosen the screw on the transmitter unit bracket and adjust the bracket to be parallel with the garage door. Tighten the screw enough to temporarily hold the unit in place.
3. Loosen the screw the receiver unit L bracket and position bracket at the height from the floor turn the receiver the LED lights up. The Photoeyesystem is now aligned.
4. As soon as proper alignment is achieved tighten the screw and nut enough to temporarily hold the unit in place.
5. Place your hand or a solid object one foot in front of the transmitter or receiver. The red LED should go OFF and remain OFF until the object is removed. NOTE: There may be a slight delay in returning to normal depending upon how long the photo eye system was blocked.

Figure 13B

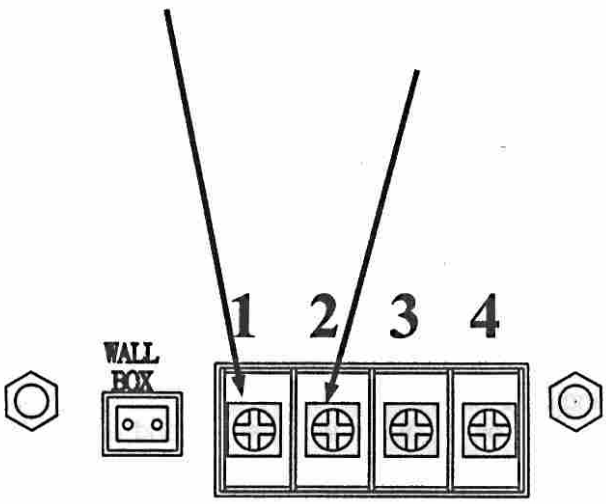

6. Move to the center of the door. Make sure the red LED light is On. Move your hand or a solid object slowly through the beam. The LED should go Off and then On. If not, check alignment of the system.

7. At this time set the down limit Page 14 and reversing system adjustment Page 15 of the opener. It is very important that the Openers inherent features operates as intended before completing the photo eye system tests.

8. Place an object at least 100mm above the floor at the center of the door. Now, attempt to close the door. The door should not close from the portable transmitter, but will close with constant pressure from the wall button.

9. Remove the obstruction from the photo eye system beams path. Close the door. Towards the bottom of the doors downward travel, Carefully move your hand across the path of the beam at the center of the door. The Door should stop, pause for approximately 1-1/2 seconds and Reopen. Retest, breaking the beam one foot in front of both the transmitter and receiver unit while the door is moving downward. The door MUST STOP and OPEN each time. If not, re-align the photo eye system until proper operation is obtained.

10. Tighten all mounting screws, nuts and bolts.

Adjustment

Warning: If Limits are not adjusted properly, the emergency release mechanism may not work properly and door operation could result in door damage or serious injury.

Note: It is now necessary to turn on the power in order to run the opener to check limit settings. Before doing so, ensure that all mounting hardware is installed and has been properly tightened, that all electrical connections are per local code requirements. Double Check that all ropes have been removed and that the doorway is clear.

Figure 14A

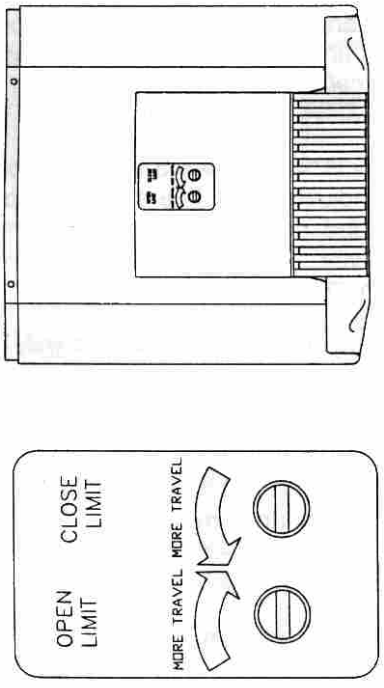

Figure 14B



- Up (Open) and Down (Close) Limits
- Limit adjustments settings regulate the total amount of distance the door will travel while opening and/or closing.
- Setting the Up Down Limits
- Note: Run the Opener through a complete travel cycle after each adjustment.
- Note: Repeated Operation of Opener may cause the motor to Overheat and the Thermal Overload Protection System will shut off the Opener. Please wait approximately 15 minutes for the Opener to cool down and automatically reset.
- If the door opens completely and closes completely without reversing: No adjustment is necessary.
- If the door does not open completely but opens at least five feet: Increase Up travel by turning UP (OPEN) LIMIT screw Clockwise
- If the door does not open five feet: Adjust OPEN FORCE ADJUSTMENT Setting Page 15.
- If Door does not close completely: Increase Down Travel by turning DOWN (CLOSE) LIMIT screw Counter-Clockwise.
- If Door reverses in full closed position: Decrease Down travel by turning DOWN (CLOSE) LIMIT screw Clockwise.
- If Door Continues to Reverse: Disconnect Door from Opener use manual release. Check for binding while working door manually. If door binds or is out of balance call a qualified garage door service person. If no binding is found and balance seems correct. Adjust FORCE ADJUSTMENT Setting Page 15.

Force/Sensitivity Adjustment

Warning: Improper Adjustment of Sensitivity System Force Could Cause Entrapment, Injury or Death. Set Adjust For Just Enough Force To Operate The Door Reliably, But No Stronger. Do Not Over-Adjust Force/Sensitivity System To Compensate For A Poorly Working, Sticking or Binding Door (Contact a qualified Garage Door Service Person to Correct any binding, sticking and/or other door problems).

Figure 15A

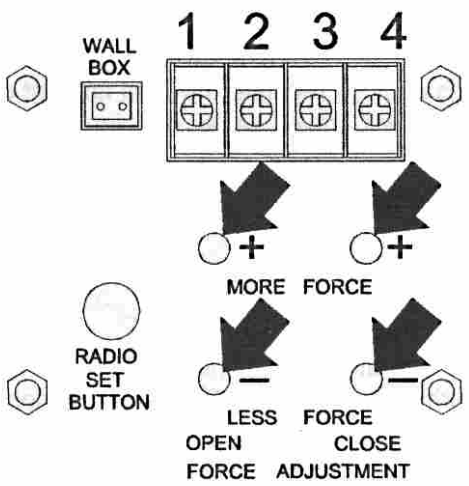

Force/Sensitivity Adjustment

- Force/Sensitivity Adjustment Controls are located on the Back Panel of the Opener (See Figure 15A). Up and Down sensitivity adjustment are independent of one another (+ indicates more force) and (– indicates more sensitivity). Never change the Force/Sensitivity setting by more than 1 increment at a time.
- **Note:** Force/Sensitivity is set at level 5 at the factory both for the up and down adjustments. The size and operating conditions of the garage door will determine the correct level of Force/Sensitivity. Weather conditions may also affect the operation of the door requiring further adjustments as needed.
- **Note:** If the down pressure adjustment is set too light the operator will reverse in the down cycle. If the up pressure adjustment is set too light the operator will stop in the up cycle.
- **Note:** There are 12 levels (increments) of up and down force/sensitivity setting. When either the maximum or minimum setting is reached the light will flash 6 times.

Setting Force/Sensitivity Adjustment

Down force/Sensitivity Adjustment

- In the down or close direction the operator will reverse if the force required to close is exceeded. If the operator completes a full closure without reversing decrease the amount of pressure in increments of one push of the down – button until the operator reverses. Once the operator does reverse in the down direction increase down pressure by pushing the down + button once.

Up Force/Sensitivity Adjustment

- In the up or open direction the operator will stop if the force required to open the door is exceeded. If the operator completes a full open cycle without stopping decrease the amount of force in increments of one push of the up – button until the operator stops during the up cycle. Once the operator does stop increase the up force by pushing the up + button once. For safety the force setting should always be set at the least amount necessary to run the door properly.

Testing the Safety Reverse System

Warning: Failure to Test Reversing System Could Result in Death or Serious Injury. Test This System Once A Month.

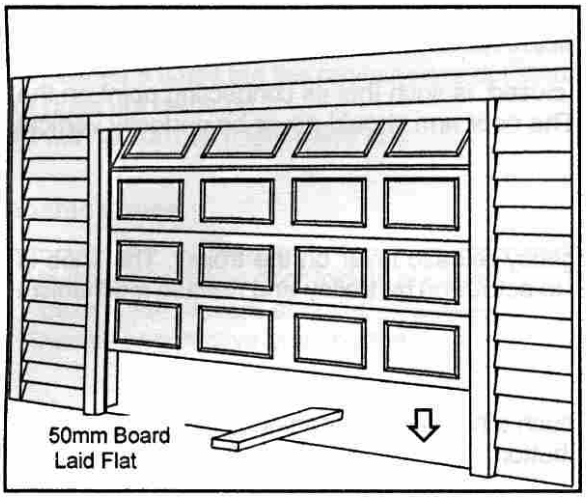

To test the Opener Reversing Feature at floor level, place a solid object 50mm thick on the ground so that the center of the door will contact it. Close the Door. If the Down force Adjustments are Correct, the door will reverse within one and a half (1-1/2) seconds of contacting the object and travel to the Full Open Position. Light will also start flashing and continue to flash for 30 seconds. If this does not occur, re-check Limit Adjustments Page 14 and Force/Sensitivity Adjustments Page 15.

Note: Any time any adjustments are made to Limits or Sensitivity, You Must Retest the opener for the Reversing Feature at Floor Level as outlined above.

Warning: The Sensitivity System Reversing Test Should Be Performed Monthly to Ensure That This Important System Remains in Proper Adjustment

Warning: A Damaged or Malfunctioning Photoeyesystem Could Enable a Garage Door to Close on People or Property, Causing Serious Injury or Death. Perform this Test Monthly to Ensure Proper Operation.

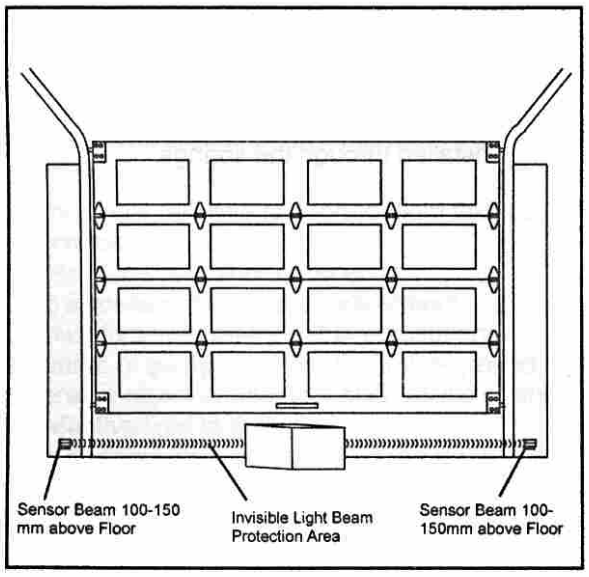

Testing the Photoeyesystem

Start the door down and then place an obstacle approximately 200mm high by 300mm wide in the path of the beam. The Red Pilot Light on the Silent Guard Photoeyesystem should go off. The door should stop for 1-1/2 seconds and reverse to the full open position. The Opener light will also begin flashing and continue to flash for 30 seconds. IF the door is moving up and the beam is broken, the door will continue up to full open. With the door fully open and at rest, place the obstacle in the path of the beam once again. Activate the Wall Push Button, The Opener will revert to and remain in the safety. Push And Hold Operation for close travel. See Page 13.

NOTE: If the Garage Door Travels More Than One Inch in a Downward Path After Releasing the Button, the Silent Guard Photoeyesystem is Malfunctioning. Check All Electrical connections and Alignment of the Photoeyesystem.

Final Installation

Make Sure That:

1. The front and rear mounts for the opener are sound and secure and the rail is positioned correctly above the high arc of the door and that the opener is positioned over the door action centerline.

2. For sectional doors , the position of the door arm with the opener closed, is such that its connecting point on the trolley is 5" to 8" behind it connecting point on the door bracket. The door arm should never be perfectly vertical when the door is in the closed position.

3. The emergency release knob and cord are secured to the emergency release lever on the trolley. The knob is located 6 ft above the floor and requires no more than 50 lbs. pull to actuate. The trolley and release mechanism are properly lubricated.

4. The standard lighted wall push button is in such a position and at such a height that it can only be actuated by an adult. The caution label is prominently displayed next to the push button.

5. All wiring is correct to code. There is ground continuity in the supply. The ground prong on the power cord is intact.

6. All ropes have been removed from the door. The door moves freely without binding when operated manually. The door is correctly balanced and lubricated. All door hardware is secure and sound. The sensitivity has been adjusted to minimum force. The appropriate warning sticker has been affixed to the door.

7. The door reverses on obstructions to within 1" of the floor. The floor beneath the closed door provides uniform contact.

8. The plastic envelope with this manual is attached to the wall near the push button.

9. On doors with extension type springs, safety restraint cables have been installed through the springs.

10. There is GFI protection on the power line to the opener.

Trouble Shooting

Symptoms	Probable Cause/Solution
Opener does not work from either the transmitter or push button.	1,2,3,5,6,9,11,17,23,24
Opener does not start on command and light flashes for 30 seconds	1,4,5,7,8,11,12,13,15,16,17,18,22,23,24
Opener stops during cycle and light flashes 5 times	6
Opener operates from push button but not radio	9,14,20,21,25
Stops before reaching full open or closed	10,15
Reverses when the door makes contact with the floor	10
Light flashes 5 times but the opener does not start	26
Light does not come on	5,19
Light will not turn off (Light stays on)	5

Probable Cause	Solution
1. Mechanical garage door lock is engaged	1. Remove all locks from the garage door
2. Power is not present at outlet.	2. Check circuit breakers, fuse box and GFI receptacle
3. Shorted or defective push button.	3. Remove push button from wall and disconnect wires from the push button (activate transmitter). If the operator works from transmitter replace push button.
4. Bell-wire is shorted	4. Disconnect bell wire from the terminal stripe on the back of the power head (activate transmitter).
5. Malfunctioning logic board	5. Unplug operator at power outlet and then reconnect. Consult repairman to replace logic board.
6. Thermal overload breaker protection has been activated.	6. Allow time for motor to cool down (15 to 30 minutes depending on temperature in the garage). Thermal breaker automatically resets itself.
7. Garage door springs are out of balance	7. Consult service repairman to balance or replace springs.
8. Garage door is jammed.	8. Operate garage door manually; disconnect opener by pulling red cord on the trolley. Look for binding or jamming of the garage door. Consult service repairman.
9. Weak transmitter battery	9. Replace 12-volt battery in the transmitter by removing the screws on the backside of the transmitter case and pulling the case open to expose battery.
10. Travel limits are out of adjustment	10. Refer to page 14 In the installation manual.
11. Photo eyes are obstructed (light flashes 30 seconds)	11. Check for obstructions between the photo eyes and remove obstruction.
12. Photo eyes are out of alignment (light flashes 30 seconds)	12. Check red LED inside the lens of the receiver photo eye (photo eye with 4 wires). Led will light up when photo eyes are aligned properly, refer to page 12 & 13 In the installation manual.
13. Photo eye bell wire is shorted (light flashes 30 seconds)	13. Replace existing bell wire with new. Make sure that insulated staples do not short wire.
14. Defective transmitter or receiver	14. Contact your local dealer.
15. Up force/sensitivity out of adjustment	15. Adjust up force/sensitivity see page 15.
16. Down force/sensitivity out of adjustment	16. Adjust down force/sensitivity see page 15.
17. Bottom of garage door frozen to the ground	17. Free bottom of the door from the ice.
18. Foreign object on the floor such as ice or snow.	18. Clear all foreign objects from under the door.
19. Defective light bulb	19. Replace with rough service bulb of 60 watts or less.
20. Radio receiver is not receiving the radio signal	20. Point wire antenna straight down towards the floor. Ensure radio signal (transmitter) has a direct line of site to the receiver. Radio signals do not pas through metal objects but do penetrate glass.
21. Location of radio transmitter	21. Contact your local dealer.
22. Defective RPM counter board.	22. Contact your local dealer.
23. Defective programming board	23. Contact your local dealer.
24. Defective photo eyes	24. Contact your local dealer.
25. Defective transmitter	25. Contact your local dealer.
26. Vacation switch is activated on the deluxe 3 function wall stations.	26. Switch back to Vacation off position.

After the Installation

1. Never permit children to play with or operate the garage door opener either from the wall station or the remote controls. Keep radio transmitter locked in the car. Misuse of the push button or transmitter could result in serious injury or even death.

2. Open the garage door with the remote controls only when the garage door is fully visible to you and clear of all obstructions. The garage door should be kept in sight until it is completely open or closed and you are certain that the garage door opener has shut off.

3. Attempting to exit the garage through the garage door opening, while the door is in motion, is a very dangerous activity that could result in serious injury or even death.

4. Children and pets should always be clear of the door opening while the garage door is in motion.

5. Check the safety reverse mechanism at least once a month to make sure that it will reverse with the minimum amount of force. Also check to be sure that the door will reverse within 1-1/2" of the floor. See page 16.

6. Check the manual operation of your garage door at least every 90 days to be sure that it is operating smoothly and does not bind or stick. Tighten all bolts on the door and visually check all hardware including springs for wear of damage. Caution: If service is needed contact your local garage door service person.

7. Do not decrease the safety reversing sensitivity mechanism to overcome a damaged or poorly operating door. This will adversely affect the operation of the safety reverse mechanism which could result in damage to the door, personal injury or even death.

Caution: Never operate the door opener if the reversing mechanism is not functioning properly.

8. Whenever possible, the manual disconnect should only be used when the door is fully closed. Caution: Extreme care must be taken whenever the disconnect cord is pulled with the door partially open. Weak or broken springs may allow the door to fall rapidly resulting in property damage, personal injury or death. If a broken spring is evident, contact your local garage door service person immediately before disconnecting the door from the opener. Never attempt servicing a broken spring.

9. Always disconnect electrical power supply to the opener when performing any maintenance or service to the opener or garage door. Failure to do so could result in electrical shock, property damage, personal injury or death.

10. If any damage to any mechanical or structural component of the opener is observed, discontinue use and contact your local garage door service person immediately.

Rail and Hardware Parts List

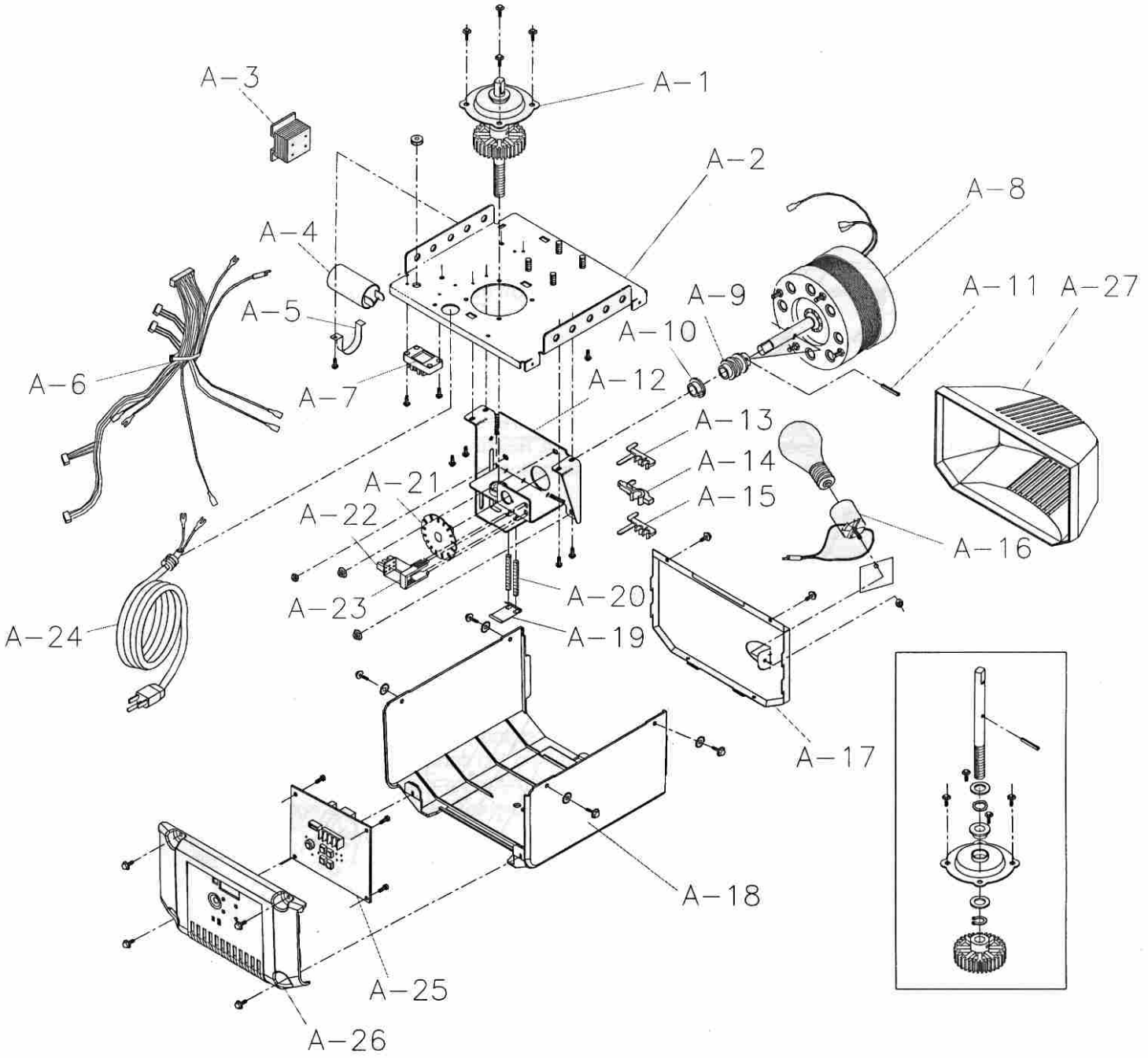

A-1	Drive Shaft Assembly w/ Helical Gear	A-10	Motor Shaft Bushing	A-19	Limit Shaft Clip
A-2	Chassis	A-11	Roll Pin	A-20	Limit Screws
A-3	Transformer	A-12	Motor Mounting Bracket	A-21	RPM Reader Wheel
A-4	Capacitor	A-13	Up Limit	A-22	RPM Reader Board
A-5	Capacitor Mounting Bracket	A-14	Limit Actuator (Traveler)	A-23	RPM Reader Board Bracket
A-6	Wiring Harness	A-15	Down Limit	A24	Power Cord
A-7	Terminal Block	A-16	Light Socket	A-25	Logic Board
A-8	Motor	A-17	Front Panel	A-26	Back Panel
A-9	Worm Gear	A-18	Wrap Cover Assembly	A-27	Light Lens

Rail and Hardware Parts List

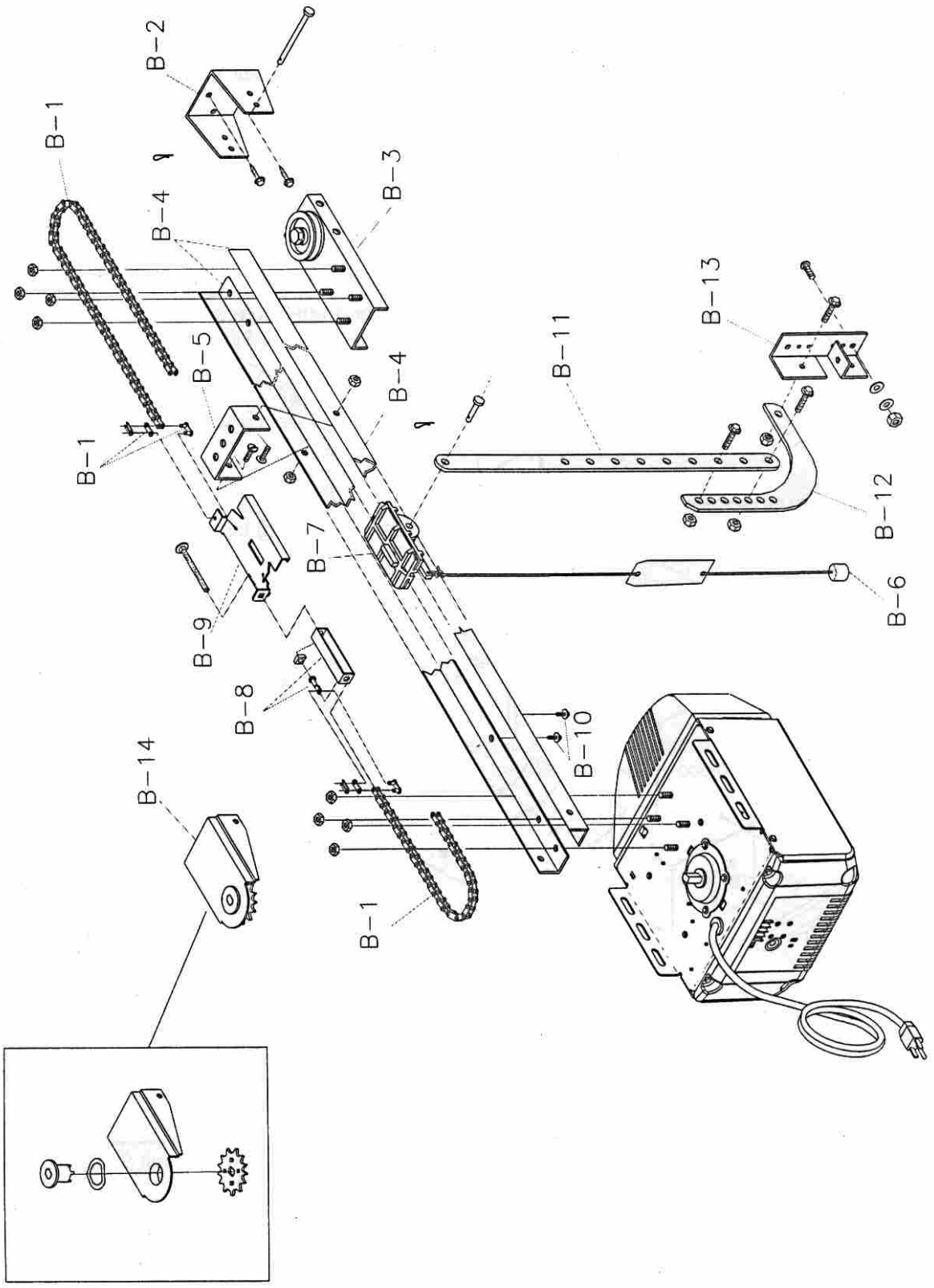

B-1	Chain	B-6	Emergency Pull-Cord with Knob	B-11	Straight Door Arm
B-2	Header Bracket	B-7	Trolley Slide Assembly	B-12	Curved Door Arm
B-3	Pulley Assembly	B-8	Chain Tension Assembly	B-13	Door Bracket
B-4	"L" Rail	B-9	Inner Trolley (Metal)	B-14	Drive Sprocket Assembly
B-5	Rail Spreader	B-10	Trolley Stop		