GDO-11 Ero™

Sectional Door Opener

Instruction Manual

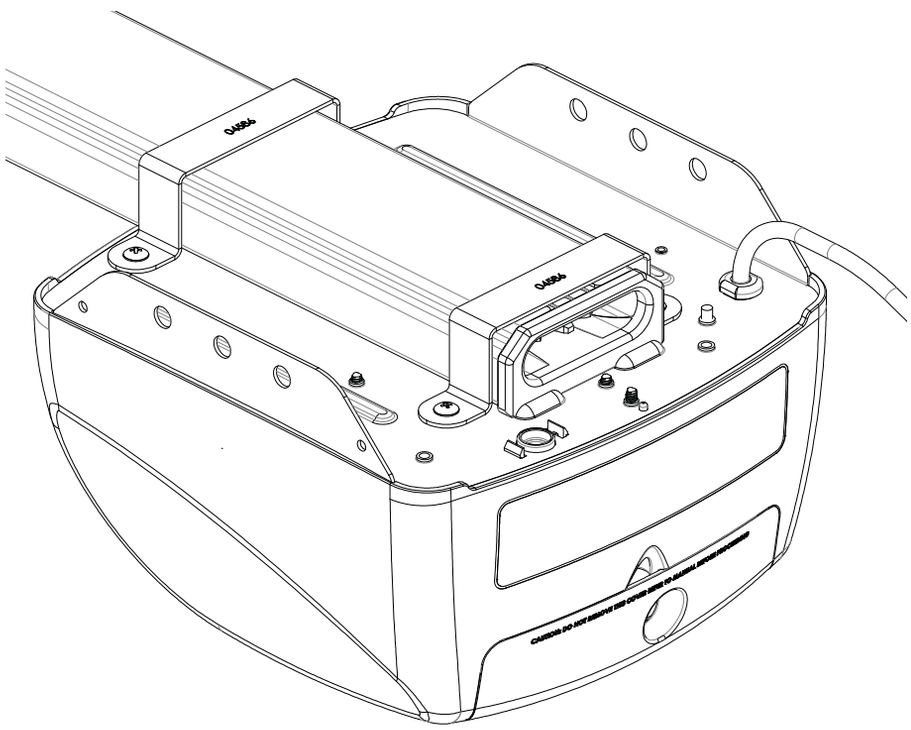

Featuring **TrioCode™128** Technology

automatic
TECHNOLOGY

Doc # 160073_00
Part # 13459
Released 29/08/16

SMART
SIMPLE
SECURE

Table of Contents

Installation Instructions

1. Installation Safety Warnings! 3
2. Before you Begin 4
   - Examine the conditions in the garage: 4
   - Test the following before commencing installation: 4
3. Tools Required 4
4. Kit Contents 5
5. Position 5
6. Fit the Opener 6
7. Bracket Position 6
   - Wall Bracket Position: 6
   - Mounting The Wall Bracket: 6
   - Attach The Rail To The Wall Bracket 6
8. Perforated Angle 7
   - Attach Perforated Angle or equivalent 7
   - Alternative Mounting Option 7
9. Mounting Brackets and Arms 8
   - Mounting The Door Bracket: 8
   - Attaching the Arms 8
10. Connect to Power 8
11. Setting Limits 9
    - Setting the Datum: 9
    - Set the Limit Positions: 9
    - Resetting the Door Limit Positions 9
    - Reset all Factory Defaults 9
    - Setting the PET Mode position 9
12. Safety Testing 10
    - Test the Close Cycle 10
    - Testing the Open Cycle 10
    - Test the Manual Door Operation 10
    - Adjusting Safety Obstruction Force 10
    - To Increase Force Pressure 10
    - To Decrease Force Pressure 10
    - To Recall Factory Set Force 10
    - To Recalculate Force Margins 10
13. Control Board & Accessories 11
    - Control Board Layout 11
    - Auxiliary Output 11
14. Coding a Transmitter 12
    - Storing the Transmitter Code 12
    - Coding a Transmitter to Enable Vacation Mode 12
    - Coding a Transmitter to enable AUX Output 12
    - Setting the Transmitter to Operate PET Mode 12
    - Coding a Transmitter to the Courtesy Light 12
    - Installation of the Wall Mounted Transmitter 13
    - Remotely Coding Transmitters 13
    - Erasing a Stored Transmitter Code 13
    - Erasing All Transmitter Codes 13

Home Owner Instructions

15. Home Owner Safety Warnings! 14
16. Opener Safety & Security 15
    - Your Door CAN NOT be used when: 15
    - Your Door CAN be used when: 15
    - To Disengage the Opener: 15
    - To Re-Engage the Opener: 15
17. Operating your Opener 15
18. User Operating Controls 16
19. Door Status Indicators 16
20. Specifications 17
21. Troubleshooting 18
22. Maintenance 20
23. Battery Replacement 20
24. Battery Disposal 20
25. Service Schedule 21
26. Warranty 22
27. Optional Accessories 23

1. Installation Safety Warnings!

This automatic garage door opener is designed and tested to offer safe service provided it is installed and operated in strict accordance with the following safety warnings. Failure to comply with the following instructions may result in death, serious personal injury or property damage.



WARNING!

- The door may operate unexpectedly, therefore do not allow anything to stay in the path of the door.
- When operating the manual release while the door is open, the door may fall rapidly due to weak or broken springs, or due to being improperly balanced.
- The drive must not be used with a door incorporating a wicket door, unless the drive cannot be operated with the wicket door open.
- The drive is intended to be installed at least 2.5m above the floor.
- Do not disengage the opener to manual operation with children/persons or any objects including motor vehicles within the doorway.
- If the door is closing and is unable to re-open when obstructed, discontinue use. Do not use a door with faulty obstruction sensing
- When using auto close mode, a Photo Electric beam must be fitted correctly and tested for operation at regular intervals. Extreme caution is recommended when using auto close mode. All safety rules must be followed.



ELECTROCUTION!

- Place opener in protected area so that it does not get wet.
- Do not spray with water .
- Disconnect the power cord from mains power before making any repairs or removing covers. Only experienced service personnel should remove covers from the opener.
- If the power supply cord is damaged, it must be replaced by an Automatic Technology service agent or suitably qualified person.
- Connect the opener to a properly earthed general purpose 240V mains power outlet installed by a qualified electrical contractor.



CAUTION:

Emergency Access	• If garage has no pedestrian entrance door, an emergency access device should be installed. This accessory allows manual operation of the garage door from outside in case of power failure.
Muscular strain	• Practice correct lifting techniques (carton weighs approx 9kgs) • Practice correct lifiting techniques when required to lift the door as per installation instructions.
Fall from ladder	• Ensure ladder is the correct type for job. • Ensure ladder is on flat firm ground that will take the weight without the legs sinking. • Ensure user has 3 points of contact while on ladder.
Crush injury from unsecured door	• Place a 2 metre exclusion zone around area under the door while it is unsecured. • Follow the installation instructions
Garage Door	• Examine the door installation, in particular, springs and mountings for signs of wear, damage and imbalance. • The garage door must be well balanced. Sticking or binding doors must be repaired by a qualified garage door installer prior to installation of the opener. • Remove or disengage all garage door locks and mechanisms prior to installation of the opener.
Entanglement	• Never plug in and operate opener prior to installation. • Keep hands and loose clothing clear of door and guides at all times.
Entrapment under operating door	• DO NOT operate the opener unless the garage door is in full view and free from objects such as cars and children/people. Make sure that the door has finished moving before entering or leaving the garage • In order for the opener to sense an object obstructing the door way, some force must be exerted on the object. As a result the object, door and/or person may suffer minor damage or injury. • Ensure the garage door is in good working order by undertaking regular servicing. • Install the optional wall transmitter in a location where the garage door is visible, but out of the reach of children at a height of at least 1.5m. • Photo Electric beams must be installed if the closing force at the bottom edge of the door exceeds 400N (40kg)

2. Before you Begin

Examine the conditions in the garage:

a. Look at the ceiling:
   i. Is it plastered? The opener is mounted to a perforated angle which MUST be securely fastened to a structural support. You will need to locate the structural beams in the ceiling which are generally 400mm apart.
   ii. does it have exposed beams? The opener is mounted to a perforated angle which must be securely fastened to a structural support like the exposed beams. You may need to install a 40mm thick board (not supplied) between structural supports.

b. Look at the wall above the garage door.
   i. Is it brick? The wall bracket MUST be securely fastened to the wall with suitable screws and ensure it does not move.
   ii. Is it timber? The wall bracket MUST be securely fastened to a structural support. You may need to install a 40mm thick board (not supplied) between structural supports to fasten the wall bracket to.

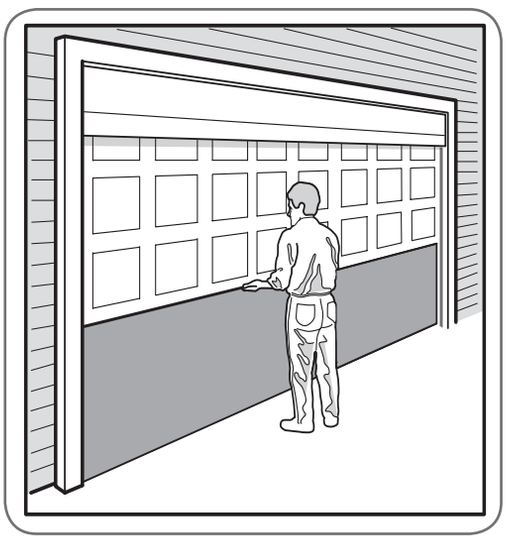

Test the following before commencing installation:

a. The door MUST BE in good operating condition.
b. Manually move the door up and down, the door should move freely without binding or sticking.
c. The maximum force required to move the door should not exceed 15kg.
d. Lift the door to about halfway. When released, the door should stay in place.



DO NOT DO IT YOURSELF:

If any of the above door requirements are not met, DO NOT attempt to fix yourself. Please contact a garage door professional. (P) 1300 133 944

3. Tools Required

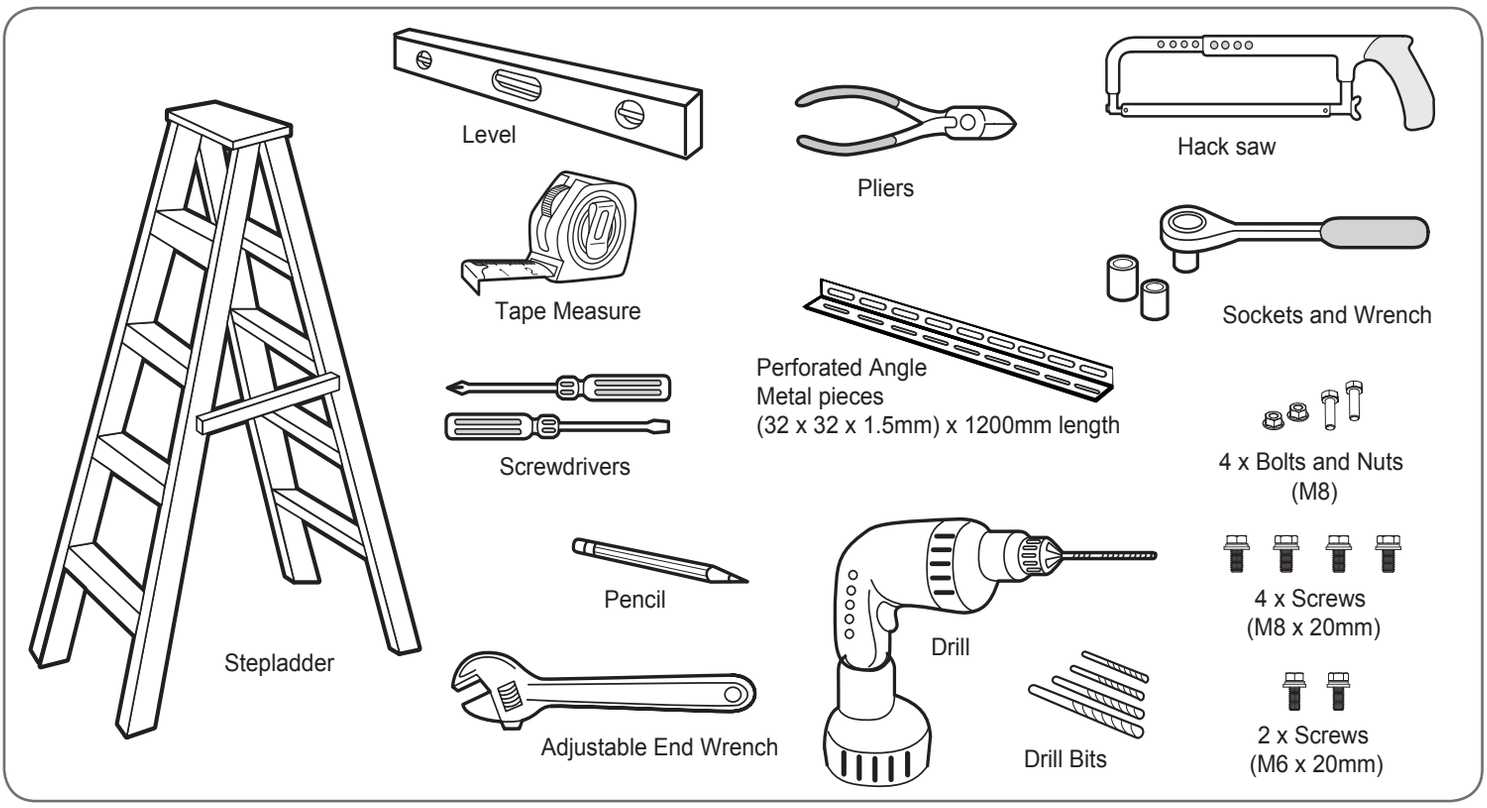

4. Kit Contents

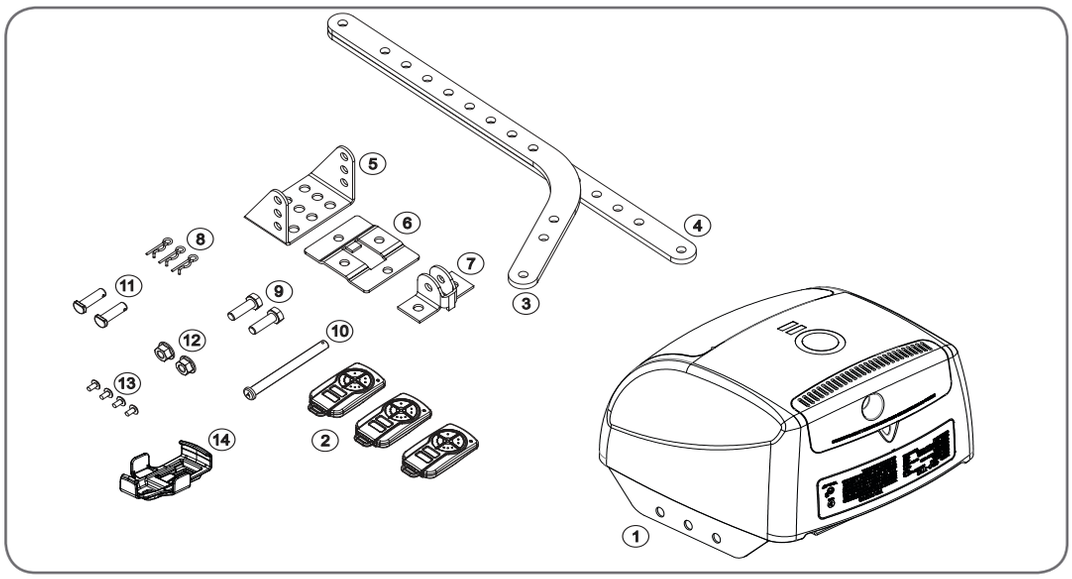

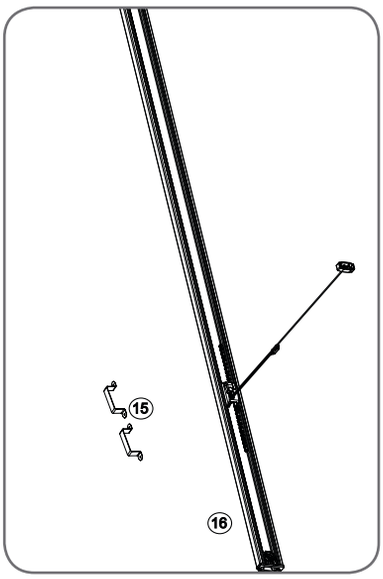

1. 1 x GDO-11 drive unit
2. 2 x Transmitters and batteries
3. 1 x Bent arm door attachment
4. 1 x Straight arm door attachment
5. 1 x Wall bracket TS01
6. 1 x Door bracket Locator
7. 1 x Door bracket
8. 3 x Pin Snap SSP 8 ZNU 31080
9. 2 x Hex Head screw M8x25
10. 1 x Pin 0890
11. 2 x Clevis Pin 0829
12. 2 x Hex Serration flange nut M8
13. 4 x Hex flange screw taptite 'S' M4 x 10
14. 1 x Visoclip

PLUS

15. 2 x Track Bracket
16. 1 x Pre-Assembled Single Piece C-Rail

5. Position

The Opener:

a. MUST BE installed in a dry position, protected from weather.
b. REQUIRES properly earthed 3 pin single phase power on the ceiling within an arms length of the opener.
c. Requires a MINIMUM HEADROOM of 57mm between the highest point of the door's travel and the ceiling.
d. Use the diagram below as a reference when completing the installation.

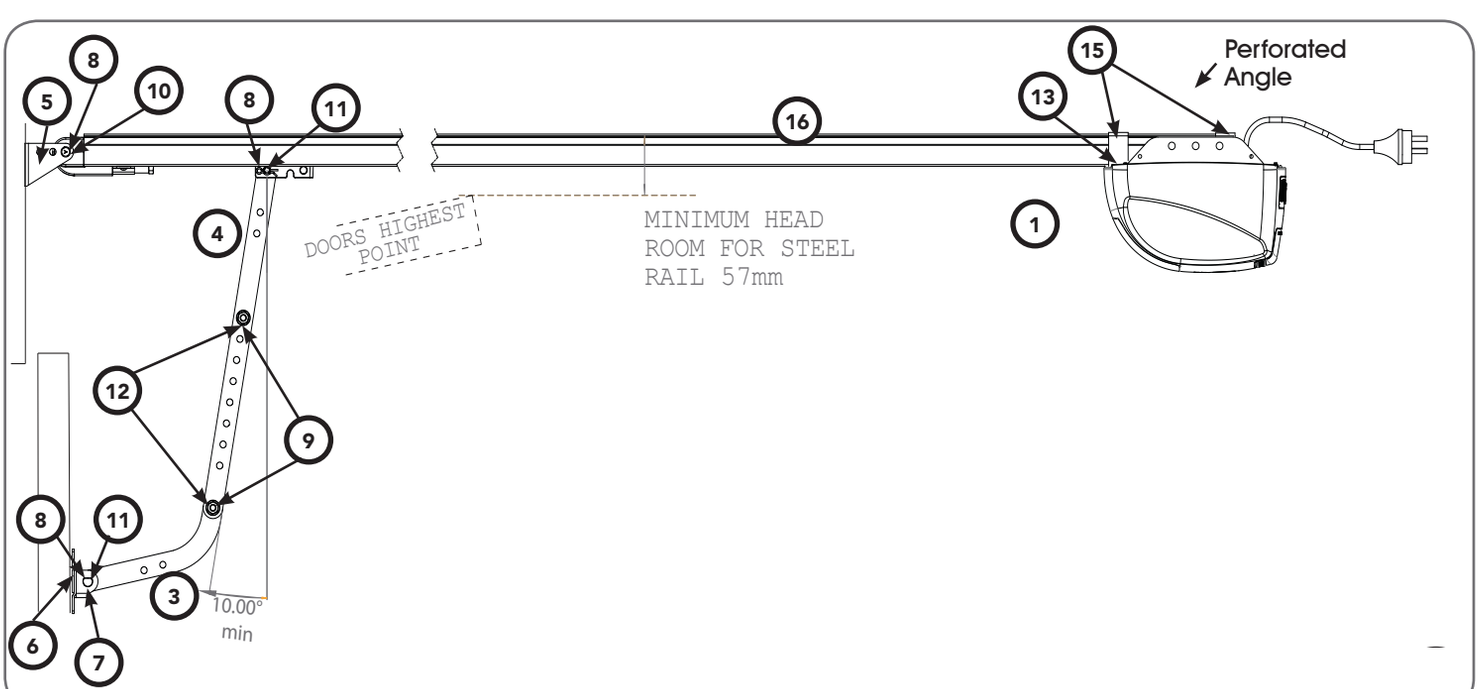

6. Fit the Opener

Secure C-Rail to Opener:

a. Remove the Opener from the box and place onto towel.
b. Locate and insert the shaft of drive unit (1) into the C-Rail's sprocket.
c. Fix the two track brackets (15) with four (4) M4 x 8 screws (14) supplied in accessory pack.
d. Place drive unit back in packing box for protection.

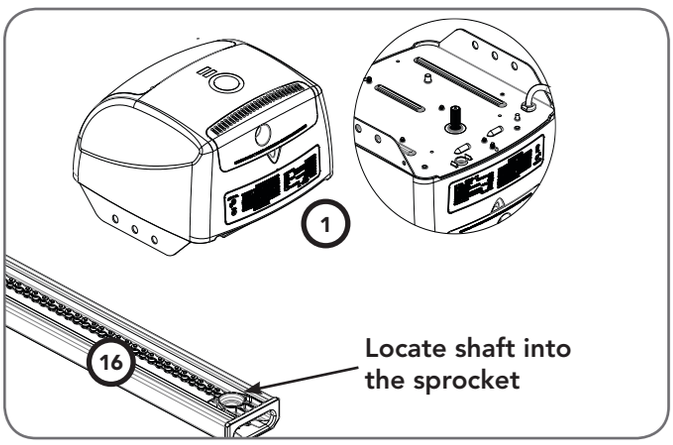

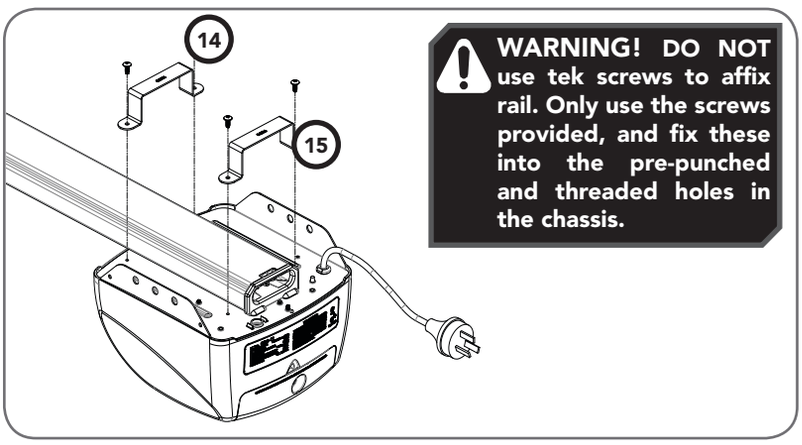

WARNING! DO NOT use tek screws to affix rail. Only use the screws provided, and fix these into the pre-punched and threaded holes in the chassis.

7. Bracket Position

Wall Bracket Position:

a. Determine the centre of the door and mark this point with a line on the wall above.
b. Raise the door and find the highest point of travel of the first (top) door panel.

WARNING! The Opener must be securely fastened to structural supports, otherwise opener failure may ensue causing serious personal injury and / or property damage.

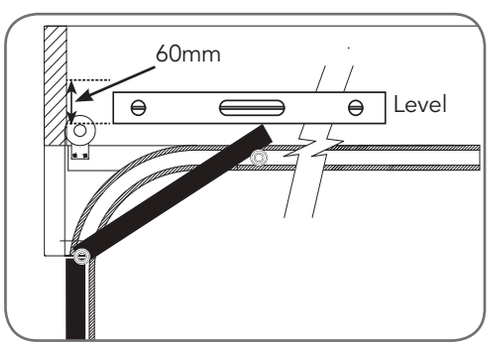

c. Using step ladder and a level, transfer this height to the wall above the door and mark a line 60mm above it, across the centre line.

DO NOT DO IT YOURSELF: If sufficient structural support can not be found, contact a door profressional for installation.

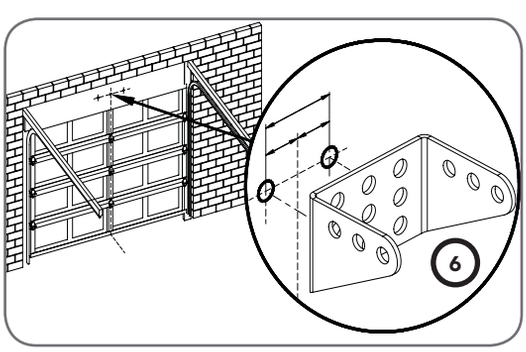

Mounting The Wall Bracket:

a. Draw two lines extending 21.5mm from each side of the centre point.
b. Centre the wall bracket (6) over the intersection of these two lines. Mark centres for at least two holes and ensure it is into a solid mounting point.
c. Drill holes in the wall with an appropriate bit.
d. Secure to the wall using:
   i. IF CONCRETE OR BRICK:
      8mm (5/6") loxins/dynabolts.
   ii. IF TIMBER:
      wood screw #20 or similar (min. 50mm).

Attach The Rail To The Wall Bracket

a. Leave the drive unit in its packing box on the floor for protection and lift the other end of the C-Rail.
b. Attach the C-Rail assembly (16) to the wall bracket (5) with the 90mm long pin (10) and secure with the supplied pin snap (8).

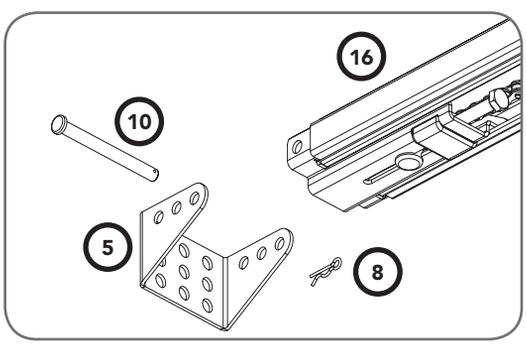

8. Perforated Angle (Not supplied)

Attach Perforated Angle (not supplied) or equivalent

a. Measure across the ceiling from the centre point 3177mm (+/- 150mm) to find a supporting beam.
b. Create a perforated angle which best suits your site. Use a hack saw to cut the L shape metal strips. Secure the perforated angle to a supporting beam using diagrams shown below.
c. Raise the drive unit to the ceiling mounted perforated angle and secure with M8x20mm screws and nuts (not supplied). Strips should not extend more than 18mm below centre of drive unit mounting holes.
d. To prevent moisture on the C-rail running into the powerhead it is recommended a strip of silicon sealant is placed across the top of the C-rail just before the opener.

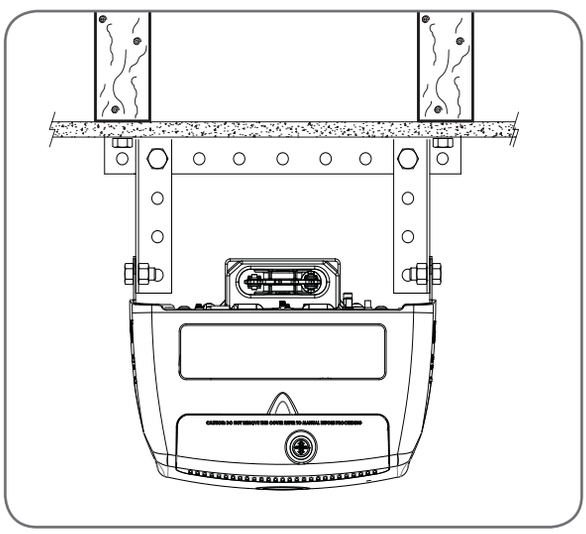

Ceiling Beams that run towards the door requires:
1 x perforated L shape metal strip and
2 x shorter perforate L shape metal drop down strips..

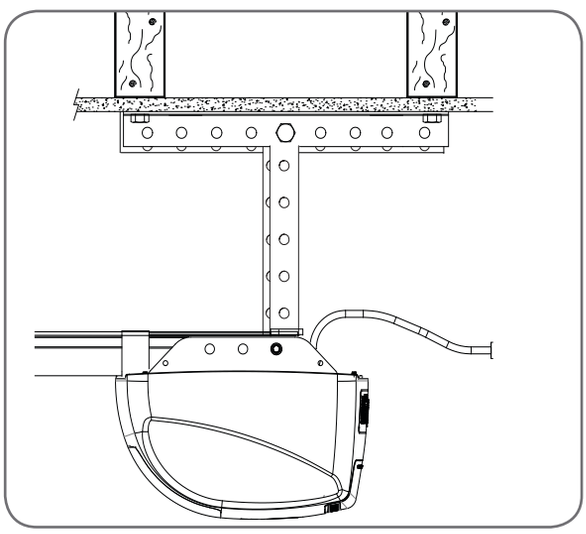

Ceiling Beams that run parallel to the door requires:
2 x perforated L shape metal strips and
2 x shorter perforate L shape metal drop down strips..

Alternative Mounting Option

(for One piece door without track (Tilt Door / J-Type))
The opener can be fastened to the roof by driving a bolt through the C-Rail into a structural timber support. The bolt head's height must not exceed 6mm.

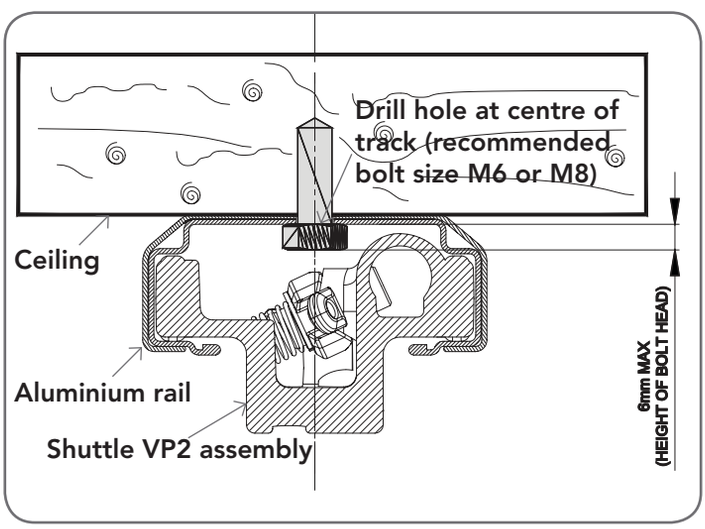

9. Mounting Brackets and Arms

Mounting The Door Bracket:

a. The door bracket locator (6) is placed over the door bracket (7), on the door's centre line one-third down the top panel and mounted using M6 or equivalent screws (not supplied),
b. STEEL DOORS ONLY: Bracket can be welded in place.

NOTE: If in doubt about the door's strength, reinforcement may be added to the door's frame where necessary. Door damage may occur if the bracket is installed on a panel with insufficient strength. The opener's warranty does not cover damage caused to the door and/or door panels.

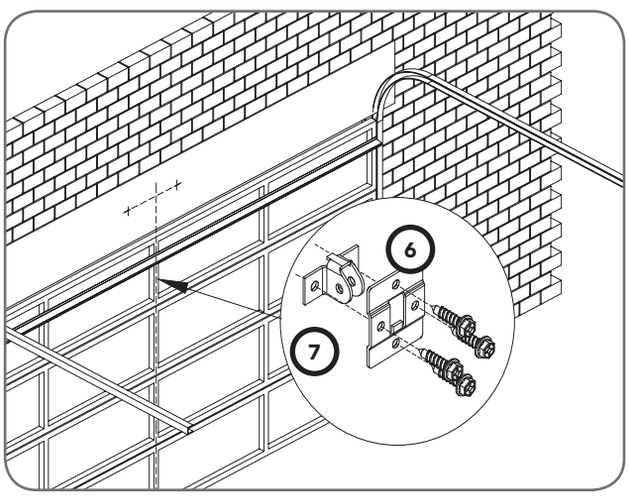

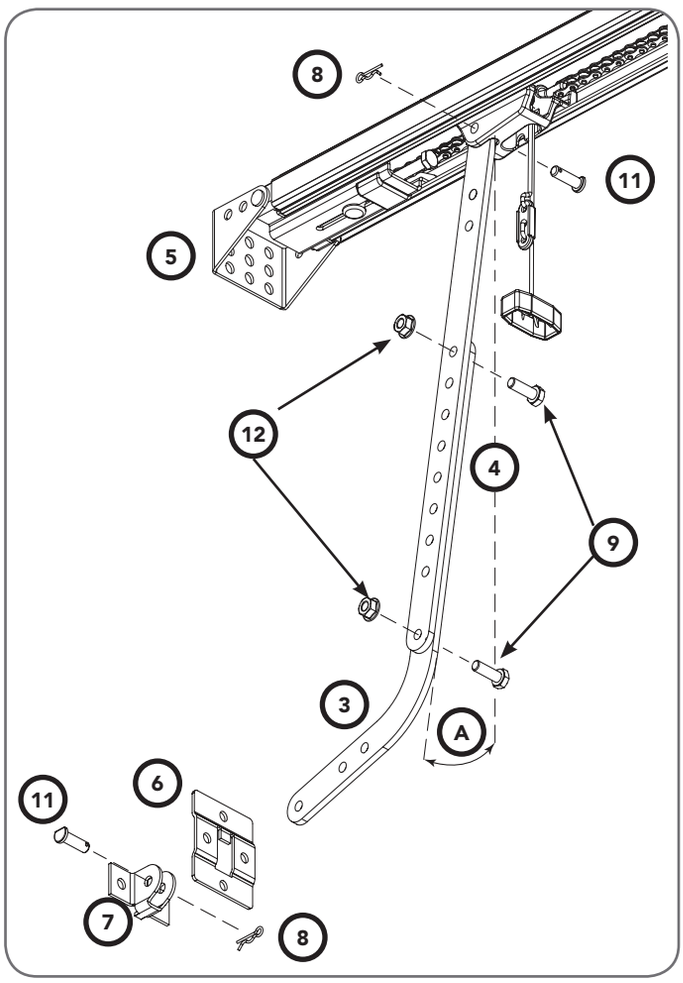

Attaching the Arms

a. Assemble the bent arm (3) (connecting to the door) to the right side of the straight arm (4) with bolts (9) and nuts (12) supplied in the accessory pack. Connect the straight arm (4) to the shuttle with a clevis pin (11) and a pin snap (8). Always use both bent and straight arms.
b. Connect the assembled arm to the bracket with clevis pin (11) and pin snap (8). The angle "A" must be more than 10°.

10. Connect to Power

Initial Preparation:

a. Swing open the controls cover to gain the access to the controls panel and swing back into it position when setup is completed.
b. Engage the C-Rail's trolley (attached to the door via the arms) with the chain index by moving the door.
c. If the trolley does not "click" firmly onto the chain index, ensure that the manual release cord is not in the disengaged position by pulling it backwards.

NOTE: This cover has a label that says "Do not remove" however, this only applies during normal operation. This cover must be removed to setup the opener. Remove the button cover with a blade screwdriver.

d. Switch power on to the opener. The red CLOSE LIMIT LED will be flashing.
e. Press and hold the MINUS (-) button - the door should start closing. If door starts to close, release button.

NOTE: If the door opens, release the MINUS (-) button and press the OPERATE button once to change the motor's direction.

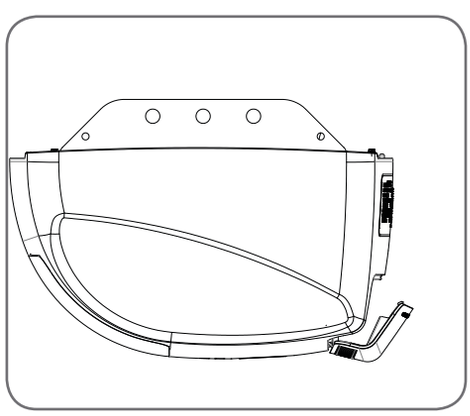

11. Setting Limits

Setting the Datum:

a. Press and hold the MINUS (-) or PLUS (+) buttons to move the door to the halfway position. Ensure that the door, shuttle and chain index are engaged.
b. Using a small blade screw driver turn the datum adjust screw slowly until the yellow status LED just illuminates.

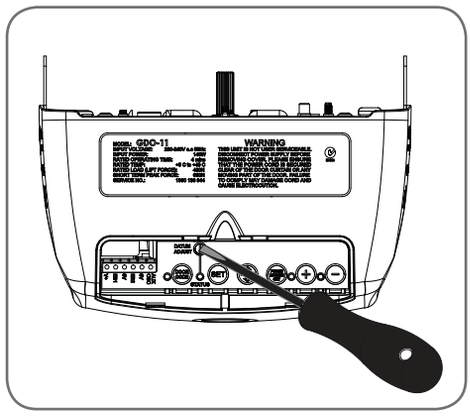

WARNING! The safety obstruction detection system is inoperable while MINUS (-) and PLUS (+) drive buttons are being used and travels limits are not set.

NOTE: If the status LED is already illuminated when power is connected then turn the datum adjust screw until the LED goes off then turn back one notch to illuminate again.

Set the Limit Positions:

The Limit Positions can vary due to site conditions, such as uneven ground. When setting the Close limits, ensure the position is when the door makes first contact with the ground. Alternatively for the Open limits the position should be at the height of the garage opening.

WARNING! In setting the close limit position, do not force the door into the floor with excessive force, as this can interfere with the ease of operation of the manual release mechanism.

a. Press and hold MINUS (-) button until the door reaches your desired close limit position. The rubber strip at the bottom of the door should form a good seal with the ground.
b. Release the MINUS (-) button when the door is near the desired closed position. Single presses of the MINUS (-) button will inch the door closer to the ground.
c. If the door overshoots press the PLUS (+) button to move the door in the open direction.
d. When the door is at the desired close position, press the LIMIT SET button, the OPEN LIMIT LED will now flash.
e. Press and hold the PLUS (+) button until the door reaches your desired open limit position. Single presses of the PLUS (+) button will inch the door open.
f. If the door overshoots press the MINUS (-) button to move the door in the close direction.
g. When the door is at the desired open position, press the LIMIT SET button.

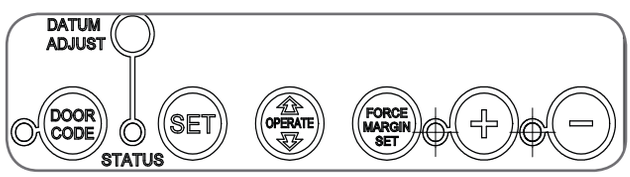

WARNING! The door will automatically close, open and close again after the next step. Ensure that nothing is in the door's path.

h. The door will now automatically close and open to calculate the safety obstruction settings.

Resetting the Door Limit Positions

Limit positions can be deleted by:

a. Press and hold MINUS (-) button for six (6) seconds until the CLOSE LIMIT LED flashes quickly.
b. Release the MINUS (-) button.

NOTE: If no action is taken within 30 seconds, the opener will return to normal operating mode and restore the original settings.

c. Follow steps a - f in Set the Limits Poisitions to set new limit positions.

Reset all Factory Defaults

a. Turn power to the opener off.
b. Press and hold the SET Button.
c. Turn power on while holding the SET button. Continue to hold until all LED's are off.
d. This will not erase transmitter codes stored in memory.

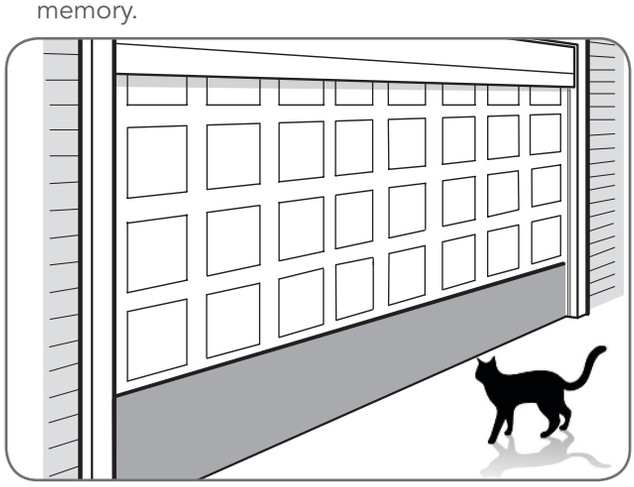

Setting the PET Mode position

When activated, PET mode drives the door to a preset position from the close position, therefore allowing a pet or parcel to go under the door.

a. Drive and stop the door at the deisred PET mode open position by pressing the transmitter button coded for Open/Stop/Close operation.
b. Press and hold the PLUS (+) button on the opener for six (6) seconds until the OPEN and CLOSE LED's are lit to record the new PET position.
c. Release the PLUS (+) button.

12. Safety Testing

Test the Close Cycle

a. Press the OPERATE button to open the door.
b. If the door closes, press the OPERATE button to stop the door, then press OPERATE again to open.
c. Place a piece of timber approximately 40mm high (or the openers cardboard box) on the floor directly under the door.
d. Press the OPERATE button to close door.
e. The door should strike the object and re-open.
f. Remove the timber or cardboard box.

WARNING! If the door is closing and is unable to re-open when obstructed, discontinue use. Do not use a door with faulty obstruction sensing.

Testing the Open Cycle

a. Press the OPERATE button to close the door.
b. Press OPERATE again to open the door.
c. When the door reaches approximately half way, firmly grab the door's bottom rail - the door should stop.

If the door does not reverse readily when closing, or stop when opening, put the door into manual by pulling down on the manual release string to diesengage the motor and contact 1300 133 924 for support.

Test the Manual Door Operation

Periodically disengage the opener and manually operate the door. The door must be smooth to operate by hand. The force required on the bottom rail should not exceed 15 kg.

Adjusting Safety Obstruction Force

The Safety Obstruction Force is calculated automatically during setup. Adjusting this is normally only necessitated by environmental conditions such as windy or dusty areas, and areas with extreme temperature changes.

To Increase Force Pressure

a. Hold down the FORCE MARGIN SET button.
b. While holding the FORCE MARGIN SET button, press the PLUS (+) button. Each press will increases the force margin.
c. The OPEN LIMIT LED will flash each time the PLUS (+) button is pressed to indicate an increase in force.
d. If the OPEN LIMIT LED flashes continuously when the PLUS (+) button is being pressed, this indicates that the maximum force setting has been reached.
e. Test the force again as per Testing Close Cycle and Testing Open Cycle.

To Decrease Force Pressure

a. Hold down the FORCE MARGIN SET button.
b. While holding the FORCE MARGIN SET button, press the MINUS (-) button. Each press will decrease the force margin.
c. The CLOSE LIMIT LED will flash each time the MINUS (-) button is pressed to indicate a decrease in force.
d. If the CLOSE LIMIT LED flashes continuously when the MINUS (-) button is being pressed, this indicates that the minimum force setting has been reached.
e. Test the force again as per Testing Close Cycle and Testing Open Cycle.

CAUTION: Take care when completing a safety test. Failure to follow this warning can result in serious personal injury and/or property damage.

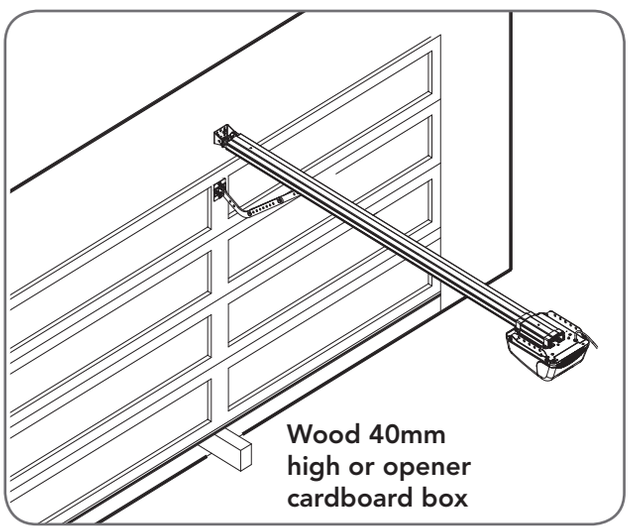

WARNING! If the door fails these tests, put the opener into manual mode, only operate the door by hand and call for service.

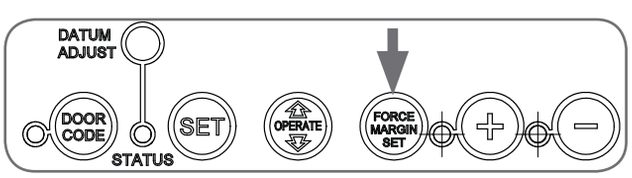

To Recall Factory Set Force

a. Holding down the FORCE MARGIN SET button and the LIMIT SET button for two seconds.
b. Release both buttons. The default setting should now be recalled.

To Recalculate Force Margins

a. Press and hold the FORCE MARGIN SET Button for six (6) seconds, the beeper will sound once.
b. The door will start to move and re-calculate force margins. The door can move between the open and close limit positions up to four (4) times (depending on the position of the door and the power up condition).
c. A single beep will be heard once the process is complete.
d. Test the force again as per Testing Close Cycle and Testing Open Cycle.

13. Control Board & Accessories

Control Board Layout

To access the control board:

a. Remove the back cover by unscrewing the two (2) screws.

b. Refer to below diagram.

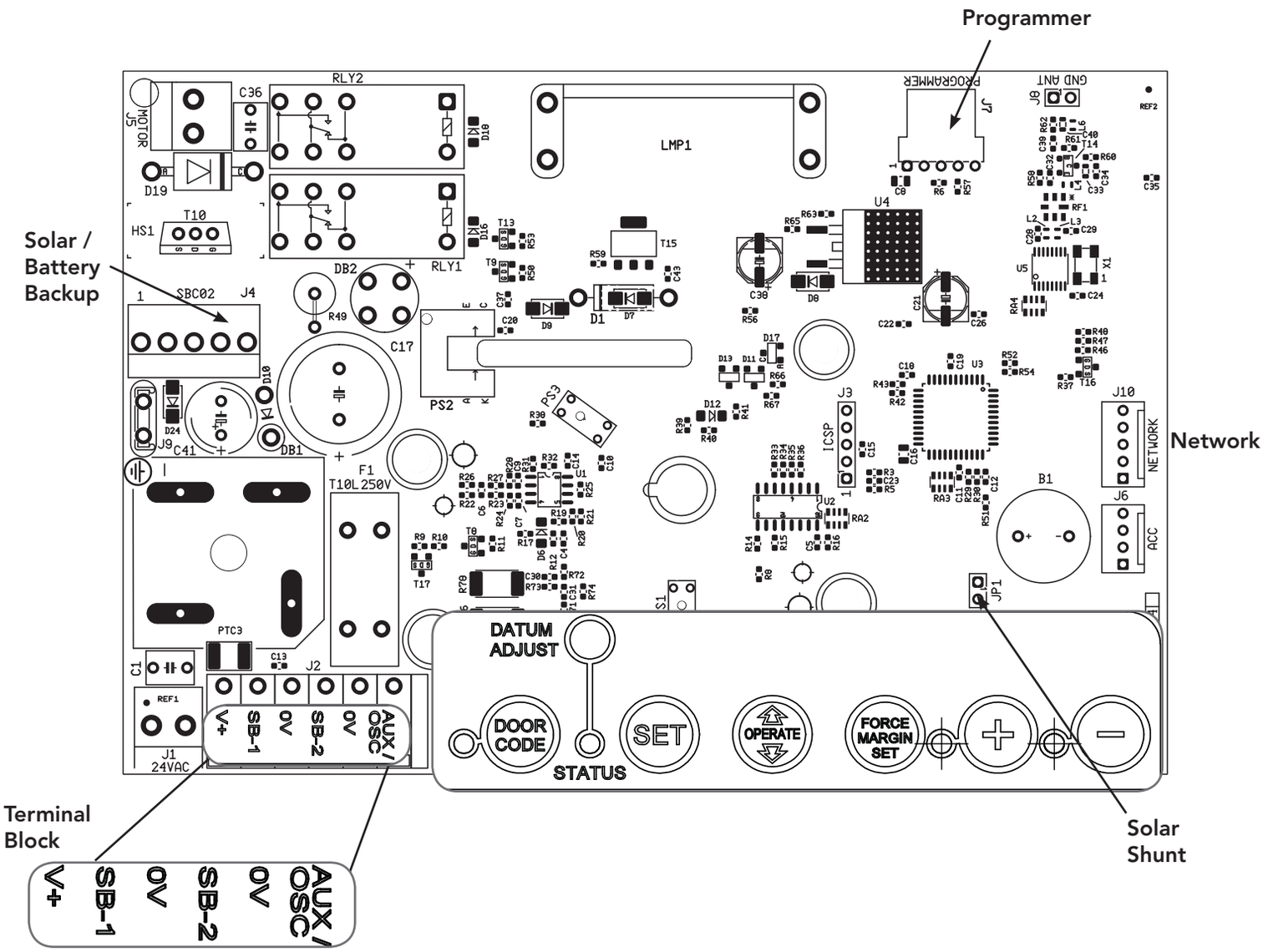

Auxiliary Output

The auxiliary output can be used to control alarm or another garage door opener. A valid transmission from the pre-coded transmitter will cause the auxiliary output to pulse for approximately 1 (one) second. The maximum DC voltage must not exceed 35 volts DC. Maximum current must not exceed 80 ma.

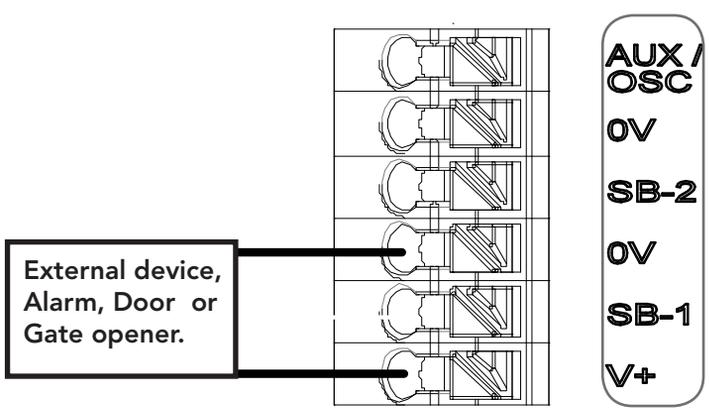

14. Coding a Transmitter

Storing the Transmitter Code

The opener can only operated from remote control transmitters that have been programmed into its memory. Up to 64 codes can be stored in the memory.

a. Press and hold the DOOR CODE button.
b. Press Button 1 on the transmitter for two seconds. Release and pause for two seconds. Press the Button 1 again for two seconds.
c. Release the DOOR CODE button. The transmitter button is now coded, press to test.

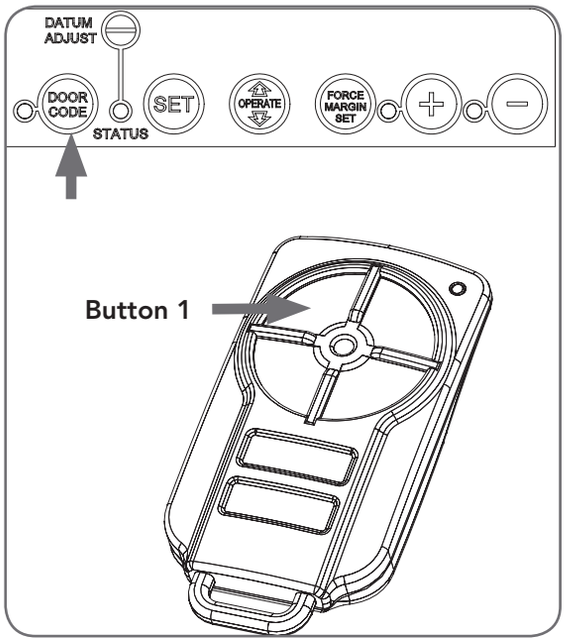

Coding a Transmitter Button to Enable Vacation Mode

The opener can be programmed into a "Vacation Mode" where the opener will not respond to any transmitter except the button of the transmitter that was programmed for vacation mode.

d. Briefly press the DOOR CODE button once, then press it again and hold (will beep two times on second press).
e. Press one of the four (4) buttons on the transmitter for two (2) seconds, pause for two (2) seconds, then press the same button again for two (2) seconds.
f. Release DOOR CODE button.
g. Press and hold the transmitter button for six (6) seconds to set Vacation Mode. The door code LED will stay lit while Vacation Mode is active.
h. To reset Vacation Mode, press the same button for two seconds.

IMPORTANT NOTE: Only TrioCode™128 **Technology Transmitters are compatible with this GDO-11 product.**

Coding a Transmitter to enable AUX Output

Briefly press the DOOR CODE button two (2) times, then press it again and hold (the opener will beep three (3) times on the third press).

a. Press one of the four buttons on the transmitter for two (2) seconds, pause for two (2) seconds, then press the same button again for two (2) seconds.
b. Release the DOOR CODE button.
c. Press the transmitter button to test.

Setting the Transmitter to Operate PET (Pedestrian) Mode

The PET mode position (see Setting the Limits) must set prior to coding a transmitter.

a. Briefly press the DOOR CODE button three (3) times, then press it again and hold (the opener will beep four times on the fourth press).
b. Choose a transmitter button not already coded into the receiver. Press and hold this button for two (2) seconds, pause for two (2) seconds, then press the same button again for two (2) seconds and release.
c. Release the DOOR CODE button.
d. Press the transmitter button to test.

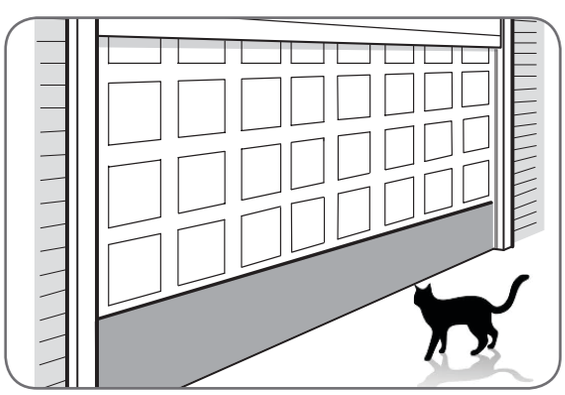

Coding a Transmitter to the Courtesy Light

The transmitter can be programmed to operate the courtesy light on the opener independently of the door moving.

a. Press and hold the LIGHT CODE button.
b. Press one of the four buttons on the transmitter for two (2) seconds, pause for two (2) seconds, then press the same button again for two (2) seconds.
c. Release the LIGHT CODE button.
d. Press the transmitter button to test.

14. Coding a Transmitter

Installation of the Wall Mounted Transmitter (optional)

a. Press and hold the DOOR CODE button.
b. Press Button 1 on the transmitter for two seconds. Release and pause for two seconds. Press the Button 1 again for two seconds.
c. Release the DOOR CODE button. The transmitter button is now coded, press to test.
d. Mount the transmitter in a convenient location, yet out of reach of children and at least 1.5m off the ground.
e. Make sure the door is visible from this location.

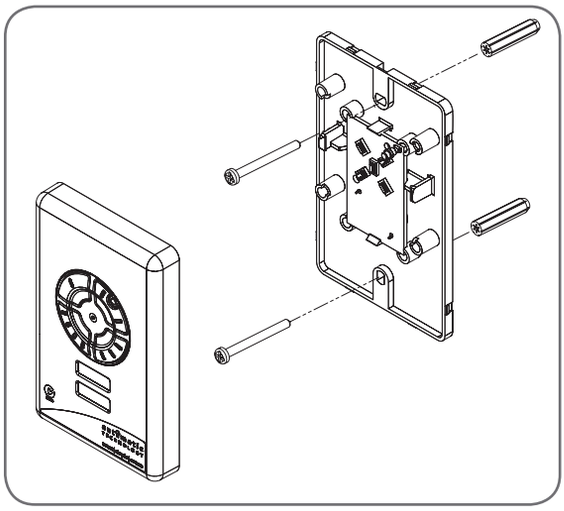

Remotely Coding Transmitters

Using this method transmitters can be coded without access to the opener's control panel as long as a pre-coded transmitter is available.

a. Take any pre-coded transmitter. Press the button for the function to be duplicated and release.
b. Using a small needle / pen, press and hold firmly for two seconds the middle button, through the Coding Hole.
c. Within ten (10) seconds take the additional transmitter you wish to code. Hold the new transmitter's button for two seconds, pause for two seconds, hold again for two seconds and then release.
d. Wait for ten (10) seconds and then press the new transmitter's button to test.

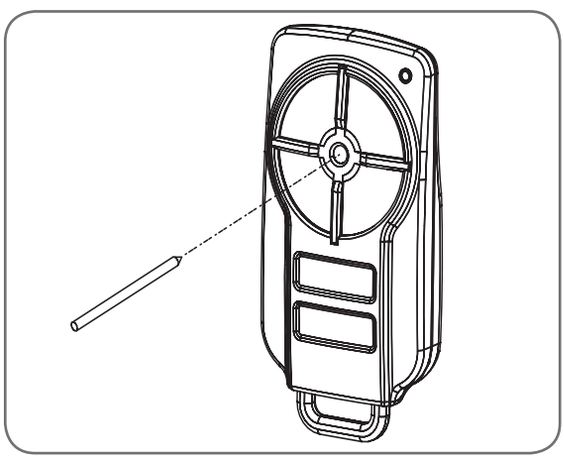

Erasing a Stored Transmitter Code

a. Select the transmitter you want to delete.
b. Press and hold the DOOR CODE BUTTON**.**
c. Press the transmitter button you would like to delete for two seconds, pause for two seconds, press again for two seconds and then release.
d. Release the DOOR CODE BUTTON. The code should now be deleted. Confirm this by pressing the transmitter button - the function (e.g. door opening) should not respond.

Erasing All Transmitter Codes

a. Turn off power to the opener.
b. While switched off, press and hold the DOOR CODE BUTTON**.** Turn on power to the opener while holding this button.
c. The OPEN LIMIT, CLOSE LIMIT and DOOR STATUS LEDs will illuminate for about five seconds. These LED's will turn off and the CODING LED will illuminate.
d. Release the DOOR CODE BUTTON. All stored codes will now be deleted. Confirm this pressing buttons on any previously coded transmitters - the opener should not respond.

15. Home Owner Safety Warnings!

This automatic garage door opener is designed and tested to offer safe service provided it is installed and operated in strict accordance with the following safety warnings. Failure to comply with the following instructions may result in death, serious personal injury or property damage.

Please read these important safety warnings!



WARNING!

- When operating the manual release while the door is open, the door may fall rapidly due to weak or broken springs, or due to being improperly balanced.
- DO NOT disengage the opener to manual operation with children/persons or any objects including motor vehicles within the doorway.
- If the door is closing and does not re-open when obstructed, discontinue use. DO NOT use a door with faulty obstruction sensing.



ELECTROCUTION!

- Place opener in protected area so that it does not get wet.
- DO NOT spray with water .
- DO NOT open the protective covers.
- DO NOT operate opener if cable is damaged.



DO NOT DO IT YOURSELF

- Keep the garage door balanced. Sticking or binding doors must be repaired. Garage doors, door springs, brackets and their hardware are under extreme tension and can cause serious personal injury. DO NOT attempt any garage door adjustment. DO NOT use if repair or adjustment is needed. Call for a professional garage door service.



CAUTION:

Emergency access	• If your garage has no pedestrian entrance door, an emergency access device should be installed. This accessory allows manual operation of the garage door from outside in case of power failure.
Entrapment under operating door	• Watch the moving door and keep people away until the door is completely opened or closed. DO NOT operate door when persons are near the door. • DO NOT allow children to play with door controls or transmitters. • Regularly conduct Open and Close cycle testing. • Ensure the garage door is in good working order by undertaking regular servicing. • Wall transmitters should be installed in a location where the garage door is visible, but out of the reach of children at a height of at least 1.5m. • Install Safety Beams (recommended).
Fall from Ladder	• Ensure ladder is the correct type for the job. • Ensure ladder is on flat ground. • Ensure user has 3 points of contact while on ladder.
Entanglement in or laceration from moving door	• Keep hands and loose clothing clear of door and guides at all times. • Keep hands clear of moving door as sharp edges can cause cuts or lacerations.

16. Opener Safety & Security

Your Door CAN NOT be used by the opener when:
a. There is a locking device installed.
b. There is a power failure.

Your Door CAN be used when:
a. There is an emergency, by disengaging the opener.
b. There is a power failure, by disengaging the opener.

To Disengage the Opener:
a. It is recommended to do so with the door in the closed position.
b. Pull the manual release cord towards the door, until you hear a click.
c. Move the door manually.

⚠ ***CAUTION:*** **When the opener is manually disengaged, the door is no longer locked. To lock the door manually, re-engage the opener after the door is closed.**

To Re-Engage the Opener:
a. Check the door has not been locked by a locking device.
b. Pull the manual release cord away from the door, until you hear a click.
c. The door will now operate from the opener.

⚠ ***CAUTION:*** **Do not use the string handle as a mechanism to open the door. Failure to comply may cause serious injury.**

⚠ **WARNING! When operating the manual release (while the door is open) the door may fall rapidly due to weak or broken springs, or due to being improperly balanced.**

Do not disengage the opener to manual operation with children/persons or any objects including motor vehicles within the doorway.

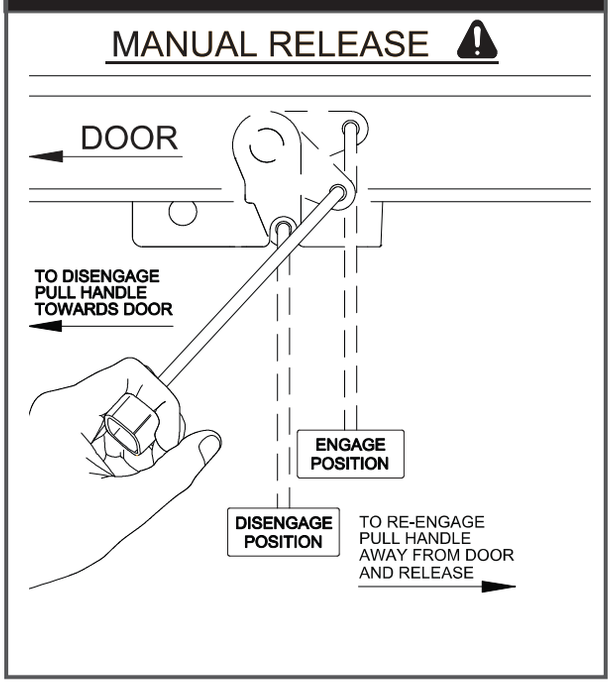

17. Operating your Opener

To Operate the opener:
a. Press the programmed transmitter button until your door begins to move (usually 2 seconds). Make sure you can see the door when you use the transmitter.
b. If you are in a vehicle you should aim the transmitter through your windscreen as shown.
c. Check that the door is fully open or closed before you drive in or away.
d. If you press the transmitter whilst the door is moving the door will stop. The next press of the transmitter will move the door in the opposite direction.

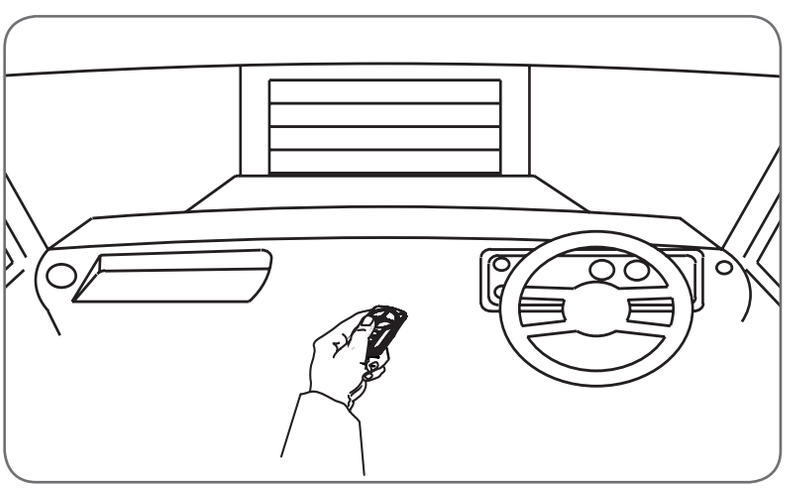

18. User Operating Controls

Button	Function
1. OPERATE	Opens/stops/closes the door
2. CODING LED (Red)	Flashes when a code is being stored or when the transmitter button is pressed
3. DOOR CODE (Blue)	Is used for storing or erasing transmitter buttons for door operation
4. DOOR STATUS LED (Yellow)	Illuminates when Service is due.
5. OPEN LED (Green)	Illuminates and flashes as the door opens and remains on when the open limit position has been reached.
6. CLOSE LED (Red)	Illuminates and flashes as the door opens closes, and remains on when the close limit position has been reached.
7. SET (Orange)	Is used during installation. The SET button is also used to program the PET (Pedestrian) position and to re-initialise the opener.

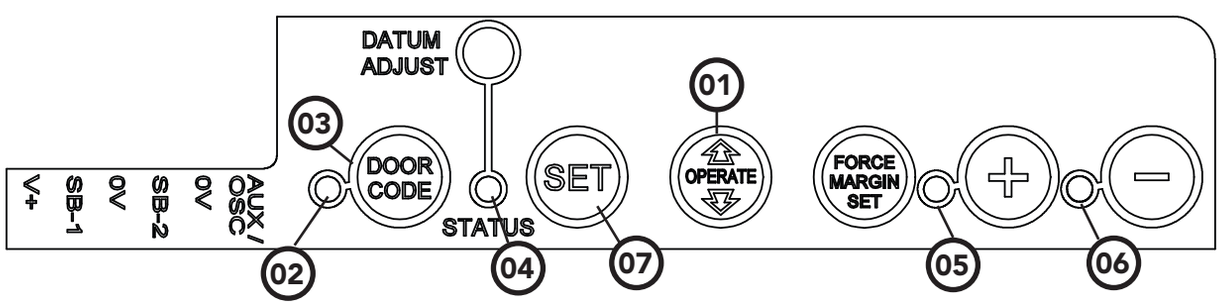

19. Door Status Indicators

Door Status Indicators	OPEN LED (green)	CLOSE LED (red)	Beeper
Open	On		
Close		On	
Opening	Flashing		
Closing		Flashing	
Door travel stopped	Flashing	Flashing	
Door obstructed when opening	Flashing		Beeps while door is moving
Door obstructed when closing		Flashing	Beeps while door is moving
Opener overloaded	Alternating flashes	Alternating flashes	
Mains power interrupted	Rapid flashes		

20. Specifications

Technical Specifications	GDO-11V3 Ero™
Power supply	230V - 240Va.c. 50Hz
Maximum door opening: Door Height (standard rail): Maximum Door Weight: Door Area: Door myst be well balanced and able to be operated by hand, as per warranty conditions and AS/NZS 4505:2012	 2440mm 100kg 16.5m^2
Minimum headroom	25mm
Short Term Peak force	650N
Rated force	400N (40kg)
Nominal force	150N (15kg)
Receiver type	Multi-frequency UHF FM (433.47, 433.92 & 434.37MHz)
Receiver code storage capacity	8 X Triocode™128 4-button Transmitters
Coding System	TrioCode™ 128 Type
Coding type	Non-linear encryption algorithm
Number of code combinations	Over 100 billion random codes
Transmitter battery	CR2032 (3 Volts)
Courtesy light	Festoon style lamp 24volts 15 watts
Network connectivity	Network compatible, (requires optional Smart Phone Control Kit)

Note: Intermittent operations may occur in areas which experience very strong winds. The strong wind puts extra pressure on the door and tracks which may in turn intermittently trigger the safety obstruction detection system.

21. Troubleshooting

Symptom	Possible cause	Remedy
The opener does not work from the transmitter	Garage door in poor condition e.g. springs may be broken	Check the door's operation
	The opener does not have power	Plug a device of similar voltage (e.g. a hairdryer) into the power point and check that it is OK
	The battery in the transmitter is flat	Replace the battery
	Transmitter does not contain TrioCode™ 128 Technology	Check that the transmitter has grey buttons and the model number on the back displays V2. Contact dealer for support if otherwise.
	The opener has been put into "Vacation Mode"	Turn off "Vacation Mode" (Section 14)
	The transmitter button is not programmed to operate the door.	Code in the transmitter
	Door Code LED is flashing yet the opener is not working.	Ensure the correct button on the transmitter is being pressed.
One transmitter works but the other/s do not	Faulty transmitter	Replace transmitter
	Flat battery	Replace battery
The chain moves but the door remains stationary	The opener is disengaged	Re-engage the opener
Motor is running but chain is not moving	Damage motor assembly	Contact your dealer for support.
The transmitter range varies or is restricted	Variations are normal depending on conditions e.g. temperature or external interference	Make sure you can see the door when you use the transmitter.
	The battery life is exhausted	Check the battery status by pressing a button (flashing or no light requires battery to be changed)
	Position of the transmitter in the motor vehicle	Aim the transmitter through the windscreen.
The Courtesy light does not work	LED has failed	Change LED.
The door reverses for no apparent reason	This may occur occasionally from environmental conditions such as areas that are windy, dusty or have extreme temperature changes.	Ensure the door runs smoothly before increasing the force pressure.
	If Safety beams are installed they may be partially obstructed.	Ensure the beam path is not obstructed. Check the Alignment.
Auto Close not working	Safety Beam or wiring faulty	Repair Safety Beam or replace wiring. Re-align optics. See Safety Beam instructions.
The door stops or moves very slowly under battery (Optional Battery Back Up Accessory)	The batteries may have little OR no charge	Connect mains power and leave the batteries to charge. The batteries may take 24 to 48 hours to reach their maximum charge capacity.

21. Troubleshooting

Symptom	Possible cause	Remedy
The SERVICE LED has started to flash and is beeping numerous times	A Fault has been detected. The fault will be active each time an attempt is made to operate the door.	Record opener function (How many beeps?) then press the SET button once to reset the opener. If the fault continues to be tripped contact 1300 133 944 for support.
The Open (Green) LED and Close (Red) LED are flashing alternatively	Opener is overloaded	Check the doors operation by disengaging the motor and ensuring the door runs smoothly. If necessary make door adjustments or contact your door professional.
The Open (Green) LED continues to flash	Door obstructed when opening	Clear away any obstructions and test door opens correctly. (If door is damaged, contact your door professionl).
The Close (Red) LED continues to flash	Door obstructed when closing	Clear away any obstructions and test door closes correctly. (If door is damaged, contact your door professional).
	Limits may be cleared	Remove all power sources (including the battery backup). Wait till all lights are out (10-15 secs), then reconnect power. If Red LED is flashing, limits are not set. Reset Limits.

Date	Time	Number of Beeps

If You Need a Service Call
If the opener needs a service please call the dealer who installed the garage door opener (their contact details are usually on a sticker on the back of your garage door). For product assistance contact 1300 133 944 within Australia.

BEFORE CALLING you should have the following information to assist in providing the appropriate service:

1. Has anything happened since the opener last operated OK, e.g. a storm, a jolt to the door etc.?
2. What is the current light status on the opener?
3. Manually disengage the door (Section 16).
   How easy is it to manually open and close the door?
4. What model is the opener? (Model no. information is located at the rear of the opener)
5. Who installed the opener? (Dealer details should be on a sticker on the back of your garage door)
6. When was it installed? (If known)

22. Maintenance

Door Maintenance
A poorly maintained door could cause fatal / serious injuries or damage to property.

- Frequently examine the door, particularly the cables, springs and mountings for signs of wear, damage or imbalance. **DO NOT USE** if repair or adjustment is needed since a fault in the installation or an incorrectly balanced door may cause injury.
- Fasterners: Check all screws, nuts and bolts to ensure they are secure.
- Spring Tension: It is natural for springs to lose tension. Should the door become hard to operate or completely inoperative, contact a door professional.
- Guide Tracks: Clean the internal sections of the guide tracks every 3 - 6 months with a cloth dampened with mineral turps or methylated spirits.

WARNING! Failure to maintain your garage door may void the warranty on your garage door opener.

DO NOT DO IT YOURSELF:
Door adjustments should only be carried out by experienced persons, as this function can be dangerous if not performed under strict safety procedures.

tip Run the Safety Testing procedures MONTHLY in Section 13 to ensure garage door is fit for use.

23. Battery Replacement

Battery Type:
3V Lithium Battery CR2032.

- To test the battery is working, press and hold a transmitter button. Check Light Status table to determine if battery needs replacing

Light Status	Battery Status
Solid	OK
Flashing	Requires replacement
No light	Requires replacement

- Use finger nails to separate the transmitter casing to expose circuit board.
- Use a non-metallic object (e.g. pen) to remove the battery.

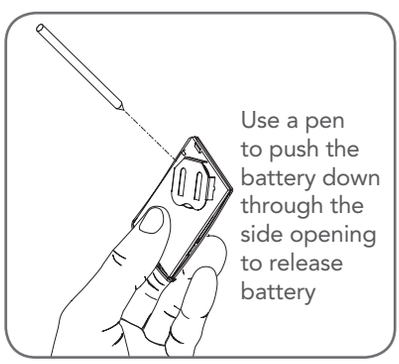
Use a pen to push the battery down through the side opening to release battery

24. Battery Disposal

When batteries reach the end of their usual life in accordance with Australian Battery Recycling Initiative please follow the next simple steps for protecting the environment. Refer to the Automatic Technology website for information on where to recycle batteries in Australia.

DO NOT throw the batteries in municipal waste. This symbol of the crossed out wheeled bin indicates that the battery should not be placed in the municipal waste. Check your local regulations for appropriate disposal of the batteries.

Recycling all batteries will have other environmental and social benefits:

- Some batteries are less toxic but hazardous for other reasons. Lithium batteries can explode or catch fire in landfill, while button cells are dangerous if swallowed by children. Recycling offers a safe and environmentally responsible solution for end of life batteries.
- Battery recycling recovers non-renewable materials such as lead, cadmium, stella, zinc, manganese, cobalt, silver, plastics and rare earth elements.
- Removal of batteries and other hazardous household products from household waste facilitates the recovery of organic materials through alternative waste technologies such as composting. Batteries and heavy metals are known contaminants in compost.
- The community supports recycling because it reduces waste to landfill and achieves environmental benefits.

WARNING! Prior to disposal, recycling, or collection, all battery terminals must be securely insulated with a non conductive material to prevent any two batteries from short circuiting and generating heat during storage or transport. Battery terminals may be insulated with electrical tape; or batteries may be individually packaged in a non conductive material (e.g., plastic bag or original packaging).

25. Service Schedule

Year / Approx. Cycles	Date	Details
1 / 3,000		
2 / 6,000		
3 / 9,000		
4 / 12,000		
5 / 15,000		

26. Warranty

Product: GDO-11V3 Ero™

Purchased from:_____Purchaser:_____
(described as "you" below)

Address:_____Installed by:_____

Installed on (date):_____Invoice No:_____

This Warranty is given by Automatic Technology (Australia) Pty Ltd (ABN 11 007 125 368) (ATA), 6-8 Fiveways Boulevard, Keysborough 3173, 1300 133 944, sales@automatictechnology.com.au

2. The Competition and Consumer Act 2010 (including the Australian Consumer Law) and other relevant statutes provide a set of statutory consumer guarantees and other legal rights that cannot be excluded, restricted or modified by contract. This Warranty is in addition to and does not affect any of your rights under the Australian Consumer Law and other relevant statutes.
3. Our goods come with guarantees that cannot be excluded under the Australian Consumer Law. You are entitled to a replacement or refund for a major failure and for compensation of any other reasonably foreseeable loss or damage. You are also entitled to have the goods repaired or replaced if the goods fail to be of acceptable quality and the failure does not amount to a major failure.
4. Subject to your non-excludable rights under the Australian Consumer Law, ATA expressly excludes any liability for consequential loss, incidental or indirect damages (including but not limited to damages for loss of business profits, business interruption and loss of business information) due to a defect of the GDO-11 Ero™ (Product). In particular any loss or damage caused to other equipment or accessories used with the product or any loss resulting from a delay in repair is excluded to extent permitted by law.
5. Subject to all of the matters set out below, ATA warrants in relation to the Product that:

(a) the Product's drive units will be free of any defects in material and workmanship for at least 5 years after the date of purchase (as evidenced by the sales docket receipt), or 10000 cycles, which ever occurs first; and
(b) the Product's other components and accessories will be free of any defects in material and workmanship for at least 12 months after the date of purchase (as evidenced by the sales docket receipt).

6. No additional warranty will apply for Products repaired during the relevant warranty period.
7. For all Products repaired outside the warranty period, a six (6) month warranty that the Product will be free of any defects in material and workmanship will apply from the date of dispatch of the Product to you. ATA may charge you for any repairs undertaken outside the warranty period, and will provide you with a quotation in relation to any such costs for your approval before proceeding with any repairs.
8. This Warranty applies only where you:

(a) immediately notify ATA at the contact details provided in paragraph 1 above or notify the or the retailer that you purchased the Product from of the alleged defect;
(b) return the product to the retailer that you purchased the Product from; and
(c) present the relevant sales docket and this Warranty document to the retailer to confirm the date of purchase.

9. Except for this Warranty, ATA gives no warranties of any kind whatsoever (whether express or implied), in relation to the product, and, subject to paragraph 1 above, all warranties of whatsoever kind relating to the product are hereby excluded.
10. This Warranty excludes damage resulting from:

(a) normal wear and tear;
(b) accidental damage;
(c) incorrect installation of the Product;
(d) blown fuses, electrical surges, power surges or power spikes;
(e) theft, fire, flood, rain, water, lightning, storms or any other acts of God;
(f) any installation, configuration or use of the Product contrary to the instructions supplied with the Product;
(g) maximum continuous operating time exceeding 1 minute in 10;
(h) the operating force exceeding 15kg* (150 Newton) when moving the door manually to the open or closed position;
(i) the door surface area exceeding 16.5m^2 for GDO-11 Ero™;
(j) the door used with the Product not being in safe working order and condition;
(k) repairs which are not authorised by ATA;
(l) any failure to install or maintain the Product in accordance with the instructions supplied with the Product;
(m) any use which is not in accordance with the instructions provided with the Product;
(n) deliberate or negligent damage to the Product;
(o) any unauthorised modification to the Product;
(p) faulty or unsuitable wiring in the building in which the Product is installed;
(q) damage caused by insects;
(r) any cost or expense relating to the recall of the Product;
(s) installation of a residential garage door opener in a commercial or industrial premises or in a dwelling other than a single-family dwelling;
(t) radio or electrical interference; or
(u) acts or omissions of any person (including service providers approved by ATA) other than ATA.

11. ATA's liability under this Warranty is limited, at ATA's absolute option, to replacing or repairing the product which ATA, in its unfettered opinion, considers to be defective either in material and/or workmanship or to credit the dealer with the price at which the product was purchased by the dealer.
12. This Warranty does not extend to cover labour for installation of the Product following repairs, the cost of which must be borne by you.
13. This Warranty is limited to Return-to-Base (RTB) repair and does not cover labour for on-site attendance, the cost of which must be borne by you.
14. Except as specified in this Warranty, ATA will not charge you for any repairs or replacements conducted under the Warranty. However, ATA will charge you for any repairs which are not within the scope of this Warranty (or which are not required to be undertaken free of charge pursuant to the Australian Consumer Law).
15. This Warranty is void if the Product is not returned to the manufacturer in original or suitably secure packaging.
16. This Warranty is only applicable for repairs to the product carried out within Australia.
17. This Warranty does not cover consumable items including, without limitation, globes, batteries and fuses.
18. This Warranty is not transferable.
19. Where the Product is retailed by any person other than ATA, except for the warranty set out above, such person has no authority from ATA to give any warranty or guarantee on ATA's behalf in addition to the warranty set out above.
20. Any provision of this Warranty that is prohibited or unenforceable in any jurisdiction is ineffective as to that jurisdiction to the extent of the prohibition or unenforceability. That does not invalidate the remaining provisions of this Warranty nor affect the validity or enforceability of that provision in any other jurisdiction.
21. Products presented for repair may be replaced by refurbished goods of the same type rather than being repaired. Refurbished parts may be used to repair the Product.

NOTES:

1. One (1) cycle = one (1) open and one (1) close action of the door.
2. This Warranty is to be read in conjunction with the owner's copy of the installation instruction manual.
3. * The door that the Product is used with should be balanced in such a way that the user is able to open or close the door manually using a force not greater than 150 Newton (15 kg), other than to initially cause the door to start moving, which may require force in excess of that specified in this paragraph.

27. Optional Accessories

There are a range of additional accessories for your added convenience and security.
Contact your Dealer for installation of these accessory items.

<table>
<tr><td colspan="2">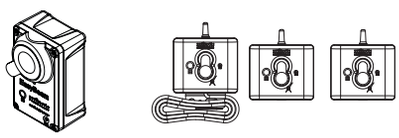</td><td>• Safety Beams - Provides additional protection if the door is closing onto your property or person. Simply breaking the beam “stops” the door!</td></tr>
<tr><td rowspan="2">IMPORTANT NOTE:
Only TrioCode™128 Technology Transmitters and Keypads are compatible with this GDO-11 product.</td><td>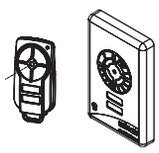</td><td>• Keyring Transmitter - Ideal for personal use when entry into the house may be via the garage.
• Wall Button Transmitter - Allows you to operate the opener within 10 metres of the door. Ideal for mounting inside the house.</td></tr>
<tr><td></td><td>• Wireless Keypad - The entry keypad allows entry to the garage without using a transmitter.</td></tr>
<tr><td colspan="2">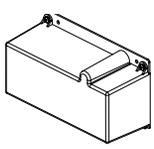</td><td>• Battery Back-up - The opener has a provision for a Battery Back Up kit that allows continued operation of the door in the absence of mains power.</td></tr>
</table>

Is your opener beeping or flashing?

It may be time for a service

(for more details see section 22)

For a service, contact your dealer using the details below...

Dealer: