Merlin®

CHOOSE SAFETY CHOOSE MERLIN

gomerlin.com.au

gomerlin.co.nz

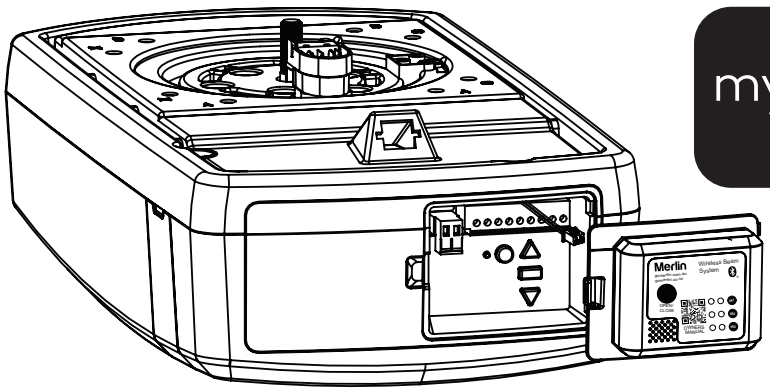

myQ®

wireless beams

battery backup compatible

Commander Platinum II

MS137MYQ

(MS137MYQX25 & MS137MYQX30)
Sectional Garage Door Opener

Installation and Operating Instructions

Australia

New Zealand

Owners Copy: SAVE THESE INSTRUCTIONS for future reference

This manual contains IMPORTANT SAFETY information
DO NOT PROCEED WITH THE INSTALLATION BEFORE READING THOROUGHLY

R-NZ

SAFETY INSTRUCTIONS

WARNING

- **Failure to comply with the following instructions may result in serious injury or property damage.**
- **Read and follow all instructions carefully.**
- **The garage door opener is designed and tested to offer safe service provided it is installed and operated in strict accordance with the instructions in this manual.**

These safety alert symbols mean WARNING : A possible risk to personal safety or property damage exists.

Keep the garage door balanced. Do not let the garage door opener compensate for a binding or sticking garage door. Sticking, binding or unbalanced doors must be repaired before installing this opener.

Do not wear rings, watches or loose clothing while installing or servicing a garage door opener. Wear gloves and suitable protective clothing where appropriate.

Frequently examine the door installation. In particular examine cable, springs and mountings for signs of wear, damage or imbalance. Do not use if repair or adjustment is needed since springs and hardware are under extreme tension and a fault can cause serious personal injury.

To avoid serious injury from entanglement, ***remove all ropes, chains and locks connected to the garage door*** before installing the door opener.

Installation and wiring must be in compliance with your local building and electrical codes.

The safety reverse system test is very important. Your garage door ***MUST*** reverse on contact with a 40 mm obstacle placed on the floor. Failure to properly adjust the opener may result in serious injury from a closing garage door. ***Repeat the test once a month and make any necessary adjustments.***

This appliance should not be used by children or persons with reduced physical, sensory or mental capablities, or a lack of experience & knowledge, unless they have been given supervision or instruction concerning use of the appliance by a person responsible for their safety.

Automatic Drive - Keep away from the area of the door as it may operate unexpectedly.

WARNING! Product includes wireless transmitters and wall controls that contain coin/button cell batteries. Keep wireless devices and batteries away from children. Battery can cause severe or fatal injuries in 2 hours or less if swallowed or placed inside any part of the body. Seek immediate medical attention if it is suspected that a coin/ button cell battery has been swallowed or placed inside any part of the body.

The opener must not be used on a wicket door (door within a door).

The Protector System^{TM} (IR Beams) must be used for all installations where the closing force as measured on the bottom of the door is over 400 N (40 kgf). Excessive force will interfere with the proper operation of the safety reverse system or damage the garage door.

Installers must ensure that the doors are installed in a compliant manner as per AS/NZS 60335.2.95.

After installation, ensure that the parts of the door do not extend over public footpaths or roads.

Install the wireless wall control (or any additional wall control) i***n a location where the garage door is visible away from moving parts, at a height of at least 1.5 m and out of the reach of children. Do not allow children to operate push buttons or transmitters.*** Serious personal injury from a closing garage door may result from misuse of the opener.

Permanently fasten the warning labels in prominent places, adjacent to wall controls and manual release mechanisms as a reminder of safe operating procedures.

Activate opener only when the door is in full view, free of obstructions and the opener is properly adjusted. No one should enter or leave the garage while the door is in motion.

Do not allow children to play near the door or with door controls.

If the power cable is damaged, it must be replaced by the manufacturer, its service agent or similarly qualified persons in order to avoid hazard.

Disconnect electric power to the garage door opener before making repairs or removing covers.

This opener should not be installed in a damp or wet space exposed to weather.

KEEP THESE INSTRUCTIONS

NOTE: If your garage has no service entrance door, we recommend an outside quick release must be installed. This accessory allows manual operation of the garage door from outside in case of power failure.

CONTENTS	PAGE
SAFETY INSTRUCTIONS	2
BEFORE YOU BEGIN	3
DOOR TYPES	3
CARTON INVENTORY	4
RAIL SIZES	4
TOOLS REQUIRED	5
HARDWARE PROVIDED	5
COMPLETED INSTALLATION	5
CONTROL PANEL	6-7
ASSEMBLY	7
INSTALLATION	8-11
OPERATE MANUAL RELEASE	11
ADJUSTMENT	11-13
INSTALL THE PROTECTOR SYSTEM	13
PROGRAM TRANSMITTER TO OPERATE OPENER LIGHT	14
TIMER TO CLOSE	15
INSTALL WARNING LABELS	16
PARTIAL OPENNG FEATURE	16
WIRELESS PROGRAMMING	17
USING YOUR OPENER	18
CARE OF YOUR OPENER	18
REPLACE BATTERIES IN TRANSMITTER	18
ACCESSORIES AND SPARE PARTS	19-21
TROUBLESHOOTING	21-22
SPECIFICATIONS	23
WARRANTY	24

INTRODUCTION

BEFORE YOU BEGIN:

1. Look at the wall and ceiling above the garage door. (The opener and header bracket must be securely fastened to structural supports).
2. Do you have a finished ceiling in your garage? If so, a support bracket and additional fastening hardware (not supplied) may be required.
3. Do you have an access door in addition to the garage door? If not, model E1702M Outside Quick Release Accessory is required. This accessory allows manual operation of the garage door from outside in case of power or mechanical failure.
4. Complete the following test to make sure your garage door is balanced and is not sticking or binding:

- Lift the door about halfway. Release the door. If balanced, it should stay in place, supported entirely by its springs.
- Raise and lower the door to see if there is any binding or sticking, 20 kg is the absolute maximum allowable force to raise or lower the door in any position. If your door binds, sticks, or is out of balance, call a trained door technician.

1 *DOOR TYPES*

A. Sectional Door with curved track

To suit spring balanced Residential Sectional doors up to 20.0 m^2.

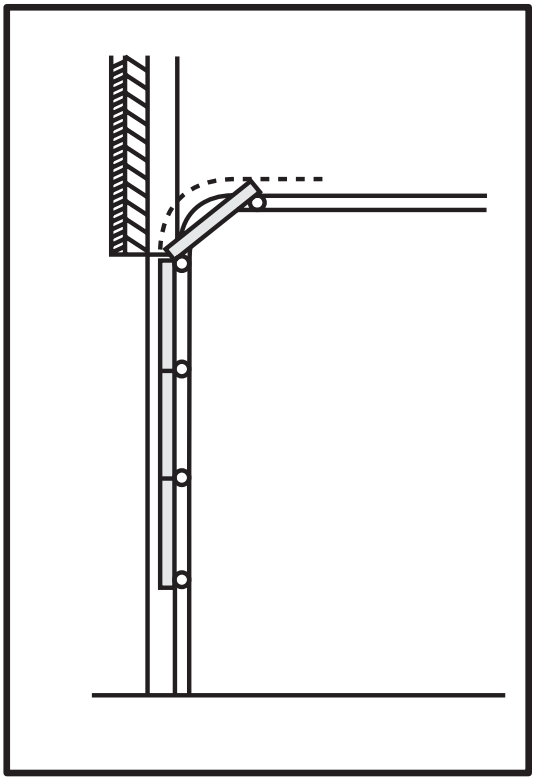

Electrical Connection

A 240 V General Purpose Outlet (GPO) ie. Power Point must be available in close proximity to the powerhead. This fitting is not part of the Opener hardware and must be supplied by the consumer.

In the event of a power outage or the unit being disconnected from the power source, the door MUST be operated and supervised so that it completes a full UP and DOWN cycle with no obstructions in place to ensure that the unit automatically checks that the safety force settings are correct.

INTRODUCTION

2 CARTON INVENTORY

Your garage door opener and rail are packed in two seperate cartons. The Commander Platinum II MS137MYQ opener carton contains the opener, its fitting hardware and accessories. The rail carton contains the rail and some hardware.

Rails:
Different length rails are available for different height doors, ensure you have the correct one.

1. Opener
2. E970M four button remote control (2)
3. E148M four button wireless wall mount remote control
4. Curved door arm
5. Hanging bracket (2)(included in rail carton)
6. Opener mounting bracket
7. Header bracket
8. Door bracket
9. Hardware bag
10. Warning labels
11. Quick Reference Guide
12. WBKIT-M The Protector System™
13. M828AU Internet Gateway
14. GLD-R2.5M or GLD-R3.0M Rail assembly (separate carton)

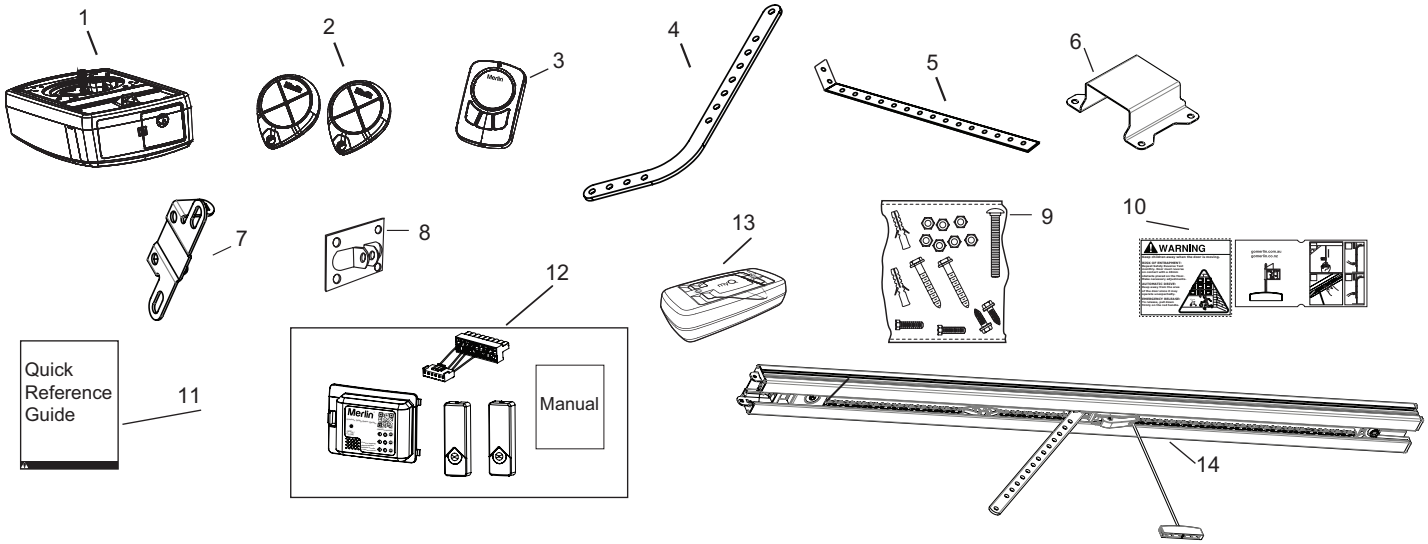

3 RAIL SIZES AVAILABLE

DOOR HEIGHT: Sectional Doors	MODEL CODE:	BELT & RAIL PART NUMBER:	RAIL LENGTH:	CEILING FIXING POINTS (standard):	ALTERNATE FIXING POINT:
Up to 2.5 m	MS137MYQXPS25	GLD-R2.5M	3322 mm single piece	Flexible	Flexible
Up to 3.0 m	MS137MYQXPS30	GLD-R3.0M	3822 mm single piece	Flexible	Flexible

INTRODUCTION

4 TOOLS REQUIRED

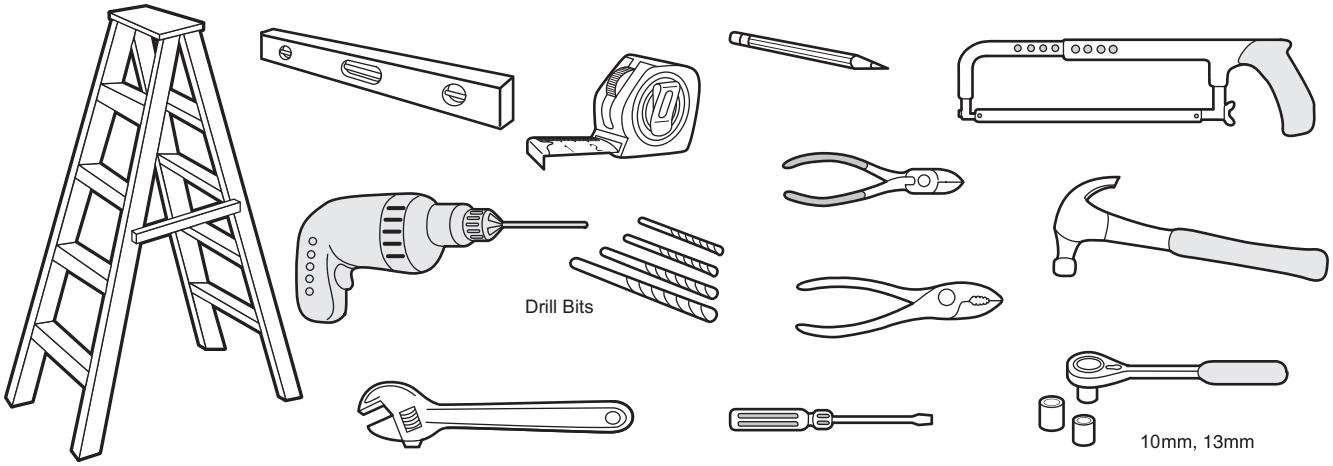

5 HARDWARE PROVIDED

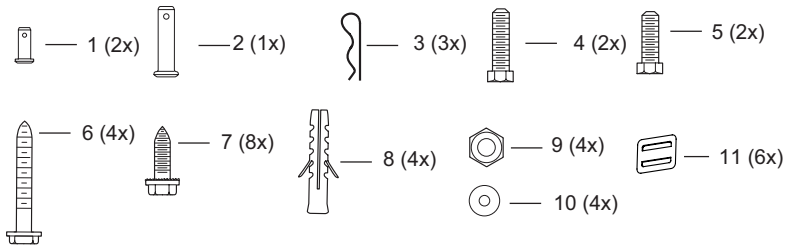

1. Clevis pin 6 mm ***(Section 13)***
2. Clevis Pin 8 mm ***(Section 17)***
3. R clip ***(Section 13 &17)***
4. Hexagonal head screw M8x25 ***(Section 15)***
5. Hexagonal head screw M8x20 ***(Section 10)***
6. Screw ST6 x 50 mm ***(Section 12)***
7. Screw ST6,3 x 18 mm ***(Sections 10 & 16)***
8. Wallplug 8mm ***(Section 12)***
9. Nut M8 ***(Sections 15 & 17)***
10. Flat washer M8 ***(Sections 15 & 17)***
11. Cable Clips

6 COMPLETED INSTALLATION

As you proceed with the assembly, installation and adjustment procedures in this manual, you may find it helpful to refer back to this illustration of a completed installation.

1. Header bracket
2. Chain
3. Rail
4. Hanging bracket
5. Opener mounting bracket
6. Power cord
7. Opener
8. Door bracket
9. Curved door arm
10. Straight door arm
11. Trolley
12. Manual release rope & handle
13. IR Safety Beams
14. WBKIT-M Base Station

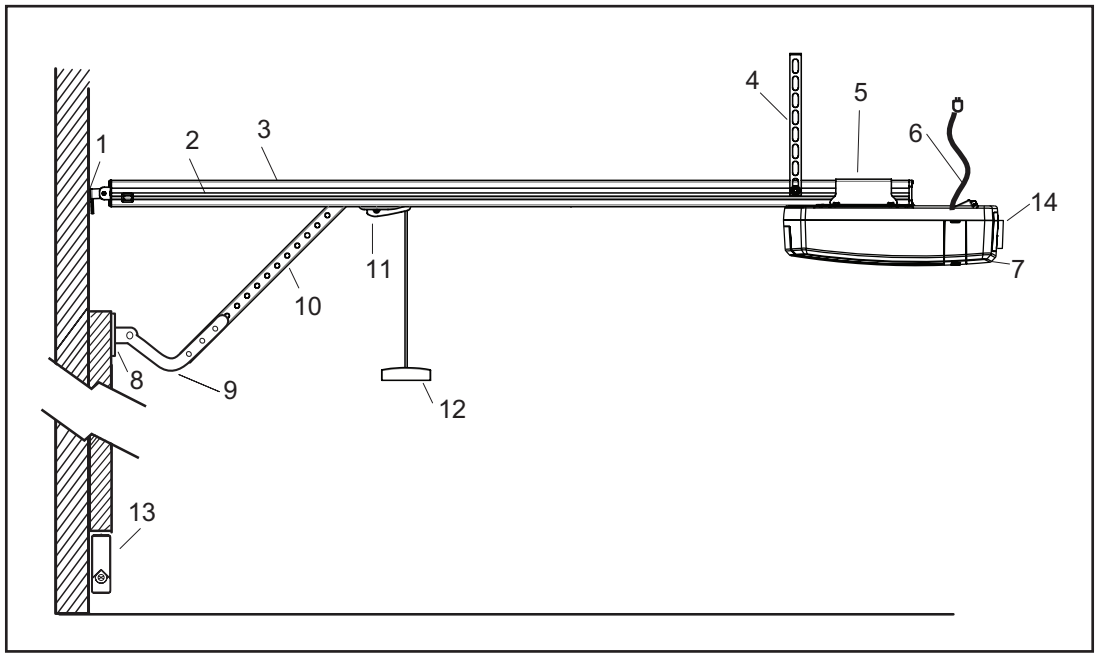

7 CONTROL PANEL - WITHOUT WBKIT-M INSTALLED

1. **External Accessory Power:** 30 Vdc 50 mA available for universal receiver.
2. **Terminal Block:** used for external accessories (see chart below).

REF	FUNCTION	COLOUR	POLARITY	COMMENT
0	E-Serial port	Green	+ve	Serial Communication Input
1	Push button	Red	+ve	Dry Contact input for push button wired wall controls
2	Ground	White	-ve	Common terminal push button
2	Ground	White	-ve	Common terminal for The Protector System™ (IR Beams)
3	IR Sensor	Grey	+ve	Chamberlain IR Beam The Protector System™ (pulsing type only)
4	Door-in-door	Green	+ve	For Door-in-door dry contact sensor: (see note below)
5	Door-in-door	Green	-ve	Common terminal for Door-in-door dry sensor (4 & 5 are normally linked)
6	Flasher	Black	+ve	Flashing light output: (24 Vdc 150 mA) while door is in motion
7	Flasher	White	-ve	Flashing light output: negative terminal

3. **UP Button:** used for initial programming, to drive the door UP, and for displaying Diagnostic Code - Digit 1.
4. **PROG Button:** used to program door limits, and other features.
5. **DOWN Button:** used for initial programming, to drive the door DOWN, and for displaying Diagnostic Code - Digit 2.
6. **LEARN Button:** used to program transmitters and learn the forces manually.
7. **Indicator LED:** used to indicate various programming modes.
8. **2 PIN plug:** used to connect the opener to the Wireless Beams Base Station.

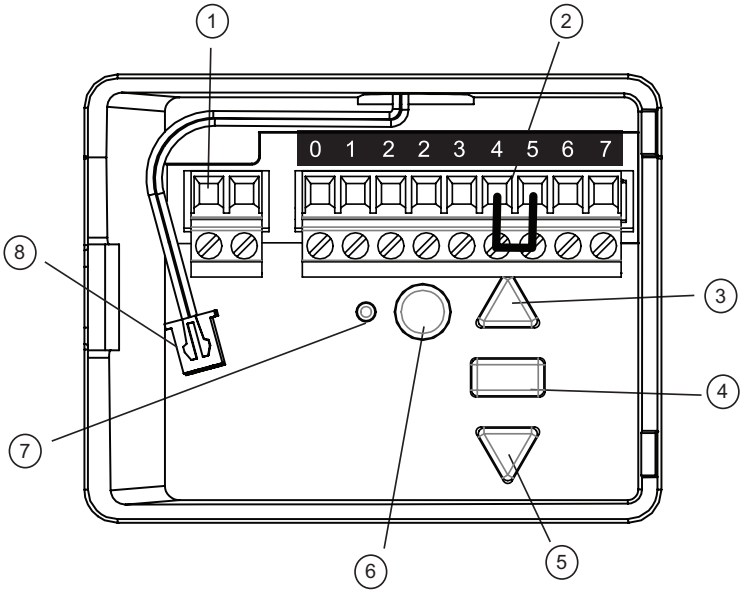

NOTE: Door in Door Connections 4 & 5 (used where built-in pedestrian doors are installed within a garage door). Terminals 4 & 5 are normally linked. If the link is removed the opener will not operate.
Remove the link and install a Safety switch to prevent the opener from activating the garage door when the built-in pedestrian door is open.
Terminals are designed for operating with a dry contact reed switch or similar.

Door safe condition = closed contacts
Door unsafe condition = open contacts.

7a *CONTROL PANEL- WITH WBKIT-M INSTALLED*

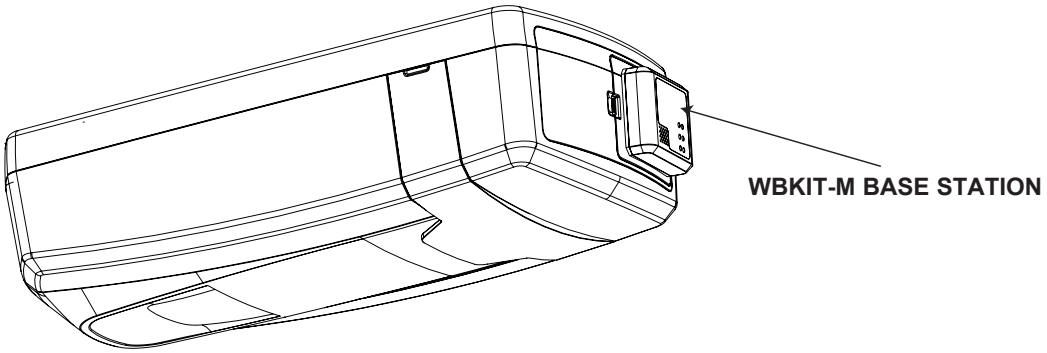

CONNECTIONS ON REAR
OF WBKIT-M BASE STATION

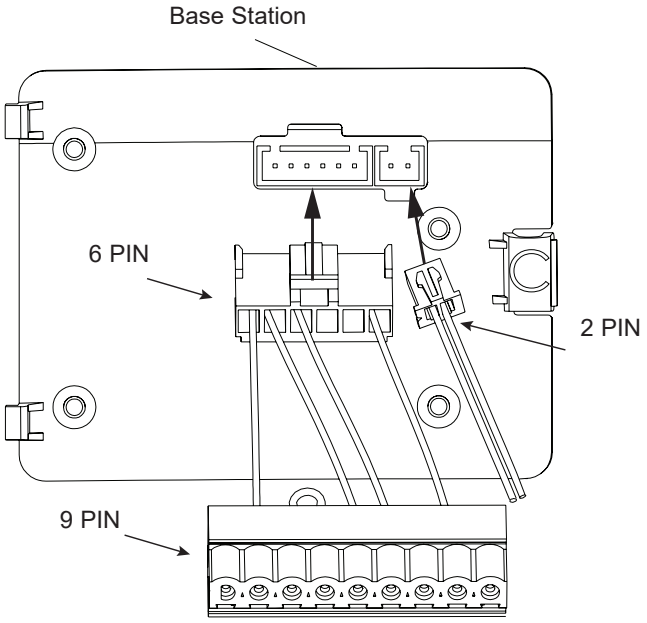

CONNECTIONS ON REAR OF
OPENER CONTROL PANEL

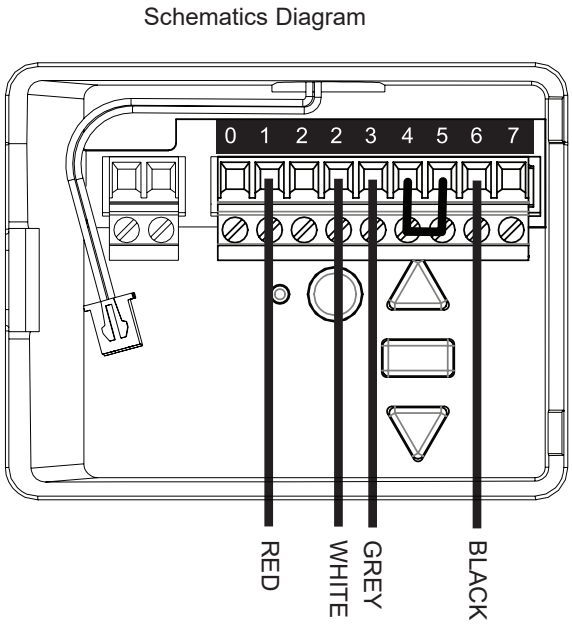

ASSEMBLY SECTION

8 *ASSEMBLING THE RAIL TO THE OPENER*

Your garage door opener and rail are packed in two separate cartons. Remove the Power Head, Rail and all the hardware in preparation for assembly.

The chain is pretensioned from the factory, however, it is advisable to check the tension and adjust if necessary as outlined in step 9.

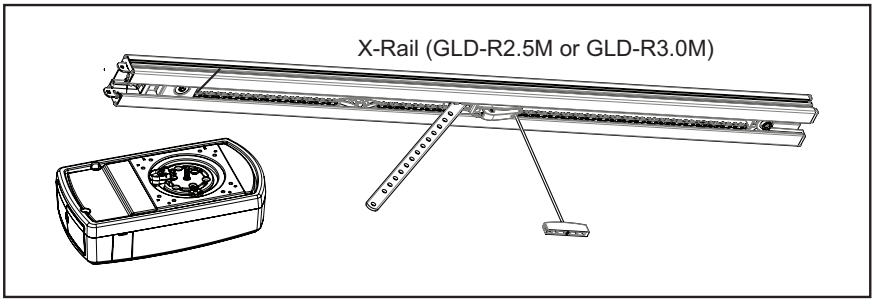

9 *TIGHTEN THE CHAIN*

Note: The spring must be able to compress and bounce during operation. Final tensioning can be performed after installation if necessary. Over tightening the chain may overload the system and cause excessive wear.

1. Tension the chain by adjusting the nut (1), on the pulley assembly, clockwise until the spring is engaged.
2. Continue tightening to compress the spring and remove all the slack in the chain. DO NOT OVERTIGHTEN but ensure chain is firm.
3. Adjust the spring to 36-38 mm as indicated in the diagram.

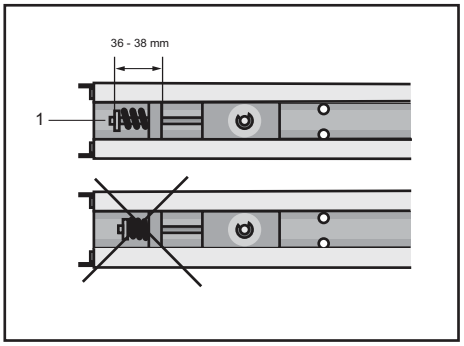

10 *FASTEN X-RAIL TO OPENER*

1. If using the hanging brackets to mount to ceiling, slide 1 x M8 hex head screw into either side of the rail (1). Slide screws 300mm from end of rail.
2. Ensure motor shaft adaptor (3) is installed within the rail drive assembly (inside the rail).
3. Position the rail drive assembly over the opener motor shaft (2) and push down to install.
4. Secure the rail on the opener with the Opener Mounting Bracket (4) using ST6,3 x 18 mm screws.

This completes the assembly of the door opener to the rail.

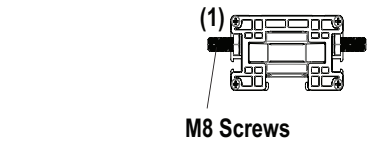

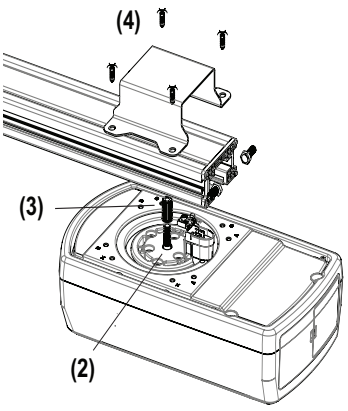

INSTALLATION

Wear protective goggles when working overhead to protect your eyes from injury.
Disengage all existing garage door locks to avoid damage to the garage door.
To avoid serious personal injury from entanglement, remove all ropes connected to the garage door before installing the opener.

11 *HEADER BRACKET POSITIONING*

The header bracket must be rigidly fastened to a structural support of the garage. Reinforce the wall or ceiling with a 40 mm board if necessary. Failure to comply may result in improper operation of safety reverse system.

You can attach the header bracket either to the header wall (1) or to the ceiling (3). Follow the instructions which will work best for your particular requirements.

With the door closed, mark the vertical centre line (2) of the garage door. Extend line onto header wall above the door.

Open door to highest point of travel. Draw an intersecting horizontal line (4) on header wall at least 50 mm above high point to provide travel clearance for top edge of door.

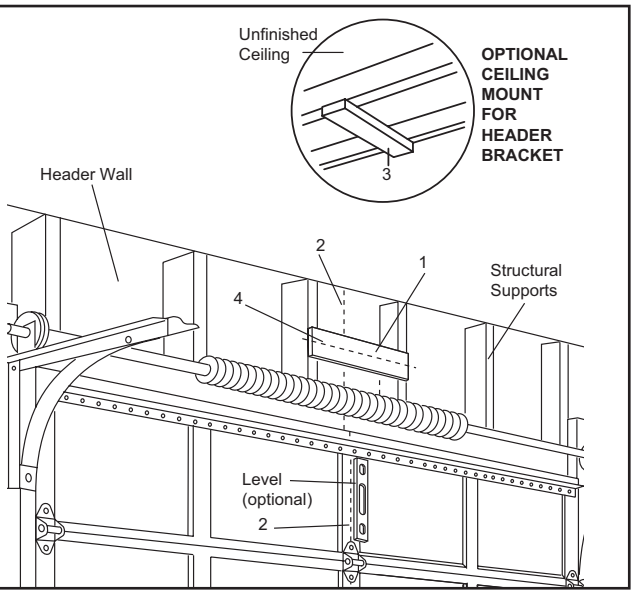

12 *INSTALL THE HEADER BRACKET*

NOTE: Refer to vertical centre and horizontal lines created in the previous section for proper placement of header bracket.

A. Wall mount: centre the header bracket (1) on the vertical centre line (2) with the bottom edge of the header bracket on the horizontal line (4) (with the arrow pointing toward the ceiling). Drill and secure the Header Bracket using the most suitable variation of holes (5). If using the wood screws provided (3) (item 6 in the Hardware Provided - Section 5), uses a 4.5 mm pilot drill. If securing to a metal fixture, self tapping “tek” screws may be more suitable.

B. Ceiling mount: extend vertical centre line (2) onto the ceiling. Centre the header bracket (1) on the vertical mark no more than 150 mm from the wall. Make sure the arrow is pointing toward the opener. Drill and secure the Header Bracket using the most suitable variation of holes (5). If using the wood screws provided, uses a 4.5 mm pilot drill. If securing to a metal fixture, self tapping “tek” screws may be more suitable. For concrete ceiling fixtures, 8 mm wall plugs are provided.

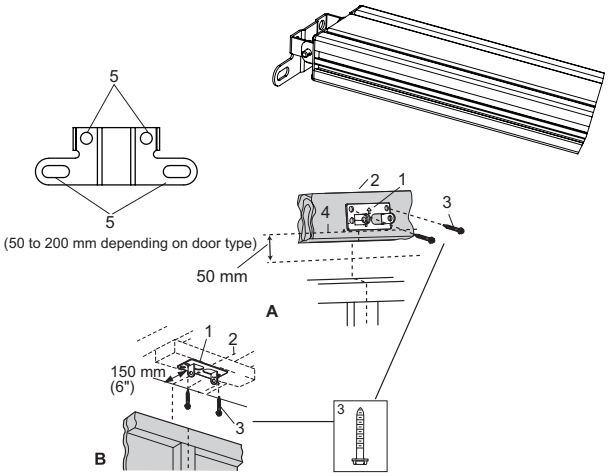

13 *ATTACH RAIL TO HEADER BRACKET*

Attach the Rail to the Header Bracket

- Position the assembled opener on the garage floor below the header bracket. Use packing material as a protective base.

NOTE: If the door spring is in the way you’ll need help. Have someone hold the opener securely on a temporary support to allow the rail to clear the spring.

- Position the rail bracket against the header bracket.
- Align the bracket holes and secure with the two 6 mm clevis pins (1) and “R” clips (2).

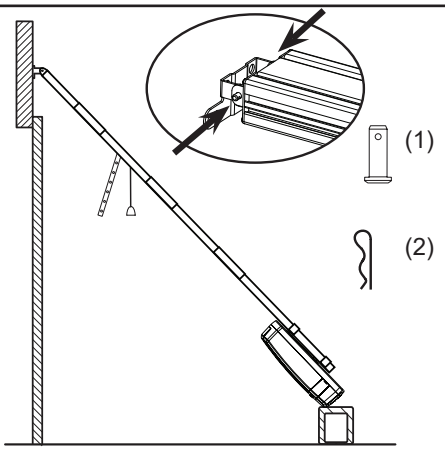

INSTALLATION

14 *POSITION THE OPENER*

Disengage the trolley mechanism (see section “Operating the manual release”) and slide it back towards the powerhead. Secure the hanging push arm up into the rail assembly temporarily using tape or rope, to avoid a hazard.

SECTIONAL DOOR

You will need a 50 mm spacer to gauge the distance between door and rail.

1. Raise the opener onto support.
2. Open the door completely, place a 50 mm spacer between the door and the rail (as shown).
3. The final positioning of the rail should be relatively parallel to the horizontal door panels.

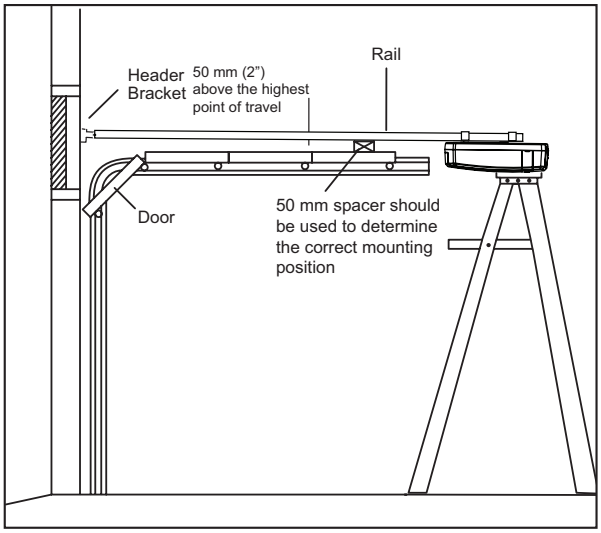

15 *HANG THE OPENER - X-RAIL*

The opener must be securely fastened to a sound structural support above the opener.

1. Postion the operator as in the previous step. Check the rail is centred over the door. Ensure the hanging brackets are on the opener end of the rail in a position as close to the operator as possible (1).
2. If hanging the opener below the ceiling, bend the hanging brackets provided, and secure to both the ceiling (2) and the rail mounting screws (3).
3. If mounting directly onto the ceiling, drill appropriate holes through the top of the rail. Use a minimum of 2 screws to fix to the ceiling. Screw the rail directly into a structural support on the ceiling (4). Ensure screw head height does not exceed 6mm (5) to avoid the screw head interfering with the trolley movement.
4. Check the opener is securely centred over the door. Remove the 50 mm spacer, and any other assembly tools. Operate the door manually and check for unrestricted operation.

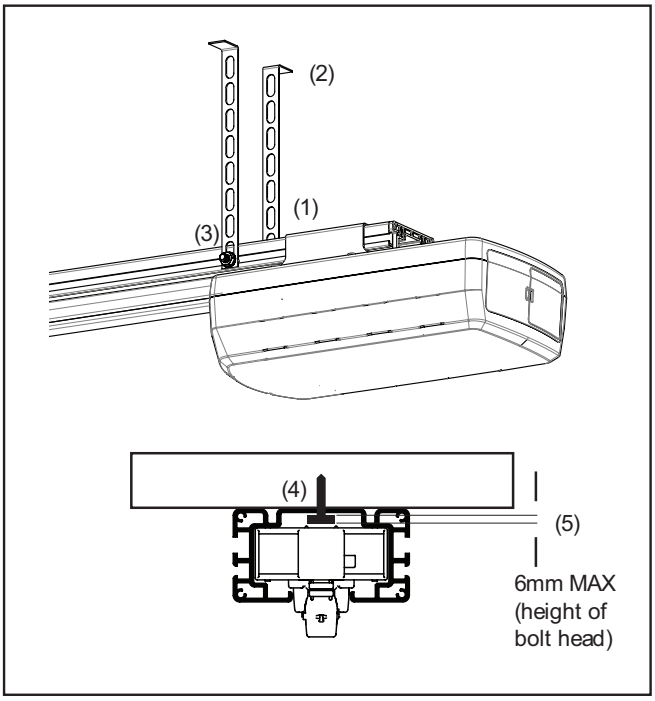

16 *FASTEN DOOR TO BRACKET*

The door bracket must be securely fastened to the frame or a structural support on the door.

Mounting position for Sectional Doors

1. Align the bracket on the centre line, measure down 100-300 mm from the door top edge.

2. Secure the bracket in this position, using the most suitable variation of holes available.

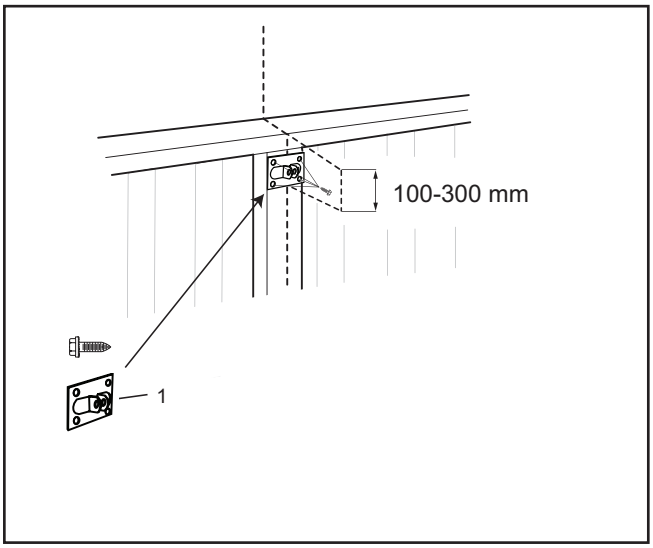

17 ATTACH DOOR ARM TO TROLLEY

Make sure the garage door is fully closed. Pull the manual release cord to disengage the trolley. Slide the trolley to around 300 mm from the header bracket.

1. The straight door arm is already preassembled to the trolley.
2. Install the curved arm onto the door bracket using the Clevis pin (2) and R-Clip. (3) supplied.
3. Move the straight and curved arms together and secure using two bolts and nuts provided (4)***.***

Ensure the angle of the straight arm is around 20 degrees from vertical, when the door is fully closed.

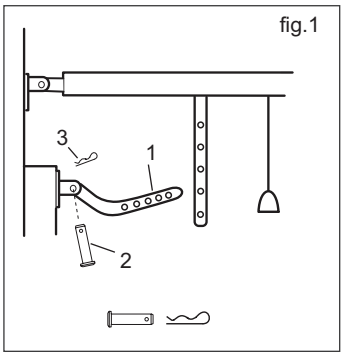

fig.1

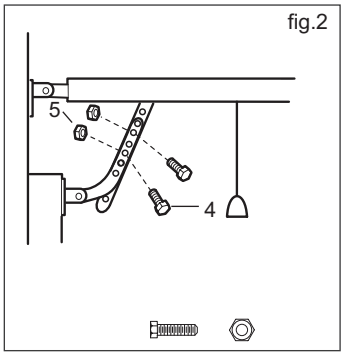

fig.2

18 OPERATING THE MANUAL RELEASE

DO NOT DISENGAGE THE OPENER TO MANUAL OPERATION WITH CHILDREN , PERSONS OR OTHER OBJECTS INCLUDING MOTOR VEHICLES WITHIN THE DOORWAY : (The door is under significant tension and if the door has developed a fault or incorrect tension, it may be unsafe and may fall rapidly).

The manual release mechanism enables the door to be manually operated during power outages or in an emergency.

The RED Manual Release cord is preassembled to the trolley. When the opener is installed the handle should be no higher then 1.8 metres from the floor. The cord may need to be extended.

Attach the manual release Instruction Label to the cord as indicated in fig 1.

DO NOT USE THE RED HANDLE TO OPEN AND CLOSE THE DOOR.

To operate the Manual Release:
The door should be fully closed if possible.

1. **Disengage:** Pull the manual release rope and handle down once to disconnect. This will disengage the trolley, allowing the door to be moved by hand, UP and DOWN as many times as needed.
2. **Re-engage:** Pull the manual release rope towards the motor until it springs back to its original horizontal position. This will re-engage the trolley, and when the door passes the trolley position it will automatically re-engage the opener.

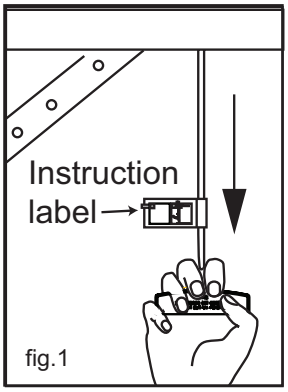

fig.1

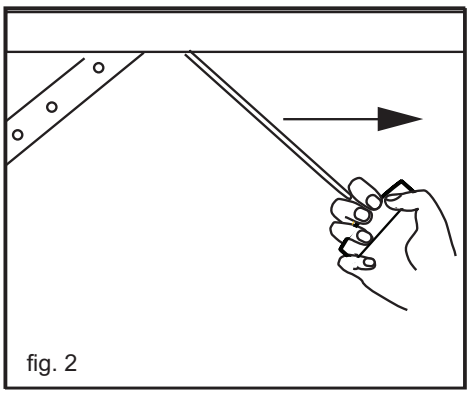
fig. 2

Connect Electric Power

TO AVOID INSTALLATION DIFFICULTIES, DO NOT RUN THE GARAGE DOOR OPENER UNTIL INSTRUCTED TO DO SO. Connect to properly fused and earthed power outlet.

- ***Ensure all ropes and installation tools have been removed from the door.***
- ***When the opener is switched ON, the operator light flashes a number of times and then remains ON.***

19 *PROGRAM THE TRAVEL LIMITS AND FORCE SETTINGS*

Travel limits regulate the points at which the door will stop when moving UP or DOWN. The travel limit buttons are located under the access cover on the rear panel (fig.1).

fig.1

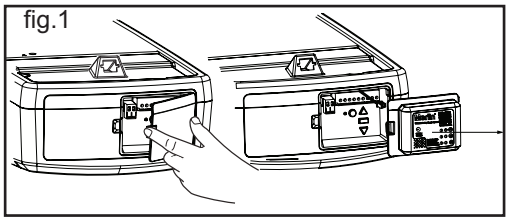

NOTE: This opener uses a POSITION TAB attached to the belt which activates a mechanical passpoint during the door travel. The indicator LED will blink when this occurs. If the passpoint is not activated during the door travel process, the travel limits cannot be programmed.

TO PROGRAM THE TRAVEL LIMITS:

1. Ensure the door is engaged to the opener trolley before setting the limits, otherwise the yellow trolley may move independently and jam into the powerhead assembly.Press the **PROG** Button until the **UP** Arrow Button and indicator LED begin to flash (fig.2).
2. Press and hold the **UP** Arrow Button until the door is in the desired UP position (fig.3).

NOTE: The UP and DOWN Arrow Buttons can be used to move the door up and down as needed.

3. Once the door is in the desired UP position press and release the **PROG** Button. The **DOWN** Arrow Button will begin to flash (fig.4).
4. Press and hold the **DOWN** Arrow Button until the door is in the desired DOWN position (fig.5).

NOTE: The UP and DOWN Arrow Buttons can be used to move the door up and down as needed.

5. Once the door is in the desired DOWN position press and release the **PROG** Button. The **UP** Arrow Button will begin to flash (fig.2).

SETTING THE FORCE (AUTO):

6. Press and release the **UP** Arrow Button to test the UP limit. When the door has travelled to the programmed UP limit, the **DOWN** Arrow Button will begin to flash.
7. Press and release the **DOWN** Arrow Button to test the DOWN limit. The door will travel to the programmed DOWN limit.
   The indicator LED will stop flashing. The travel limits and force setting has now been set. Proceed to test safety reverse system.

SETTING THE FORCE (MANUAL LEARN IF REQUIRED):

1. Start with the door fully CLOSED.
2. Open the rear access panel. Locate the yellow Learn button.
3. Push the yellow Learn button twice to enter Force Adjustment mode. The Indicator LED will flash quickly.
4. Press and release the UP Arrow Button. The door will travel to the programmed UP Limit.
5. Press and release the DOWN Arrow Button. The door will travel to the programmed DOWN limit.

The Indicator LED will stop flashing when the force has been set. The door must travel through a complete cycle, UP and DOWN, in order for the force to be set properly. If the unit cannot open and close your door fully, inspect your door to insure that it is not sticking or binding

Without a properly installed safety reversal system, persons (particularly small children) could be SERIOUSLY INJURED or KILLED by a closing door.

- ***Incorrect adjustment of garage door travel limits will interfere with proper operation of safety reversal system.***
- ***NEVER use force adjustments to compensate for a binding or sticking garage door.***
- ***After ANY adjustments are made, the safety reversal system MUST be tested. Door MUST reverse on contact with 40 mm high object laid flat on floor.***

CAUTION

To prevent damage to vehicles, be sure fully open door provides adequate clearance.

fig.2

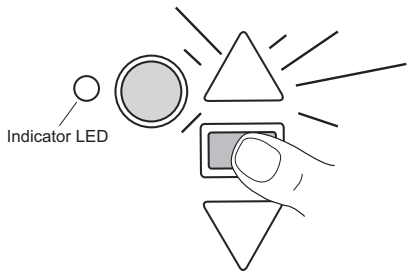

fig.3

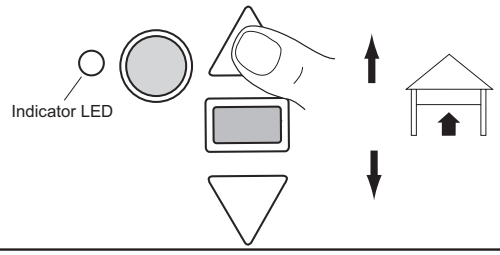

fig.4

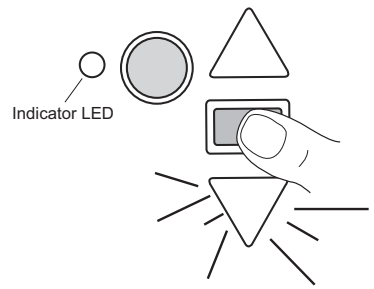

fig.5

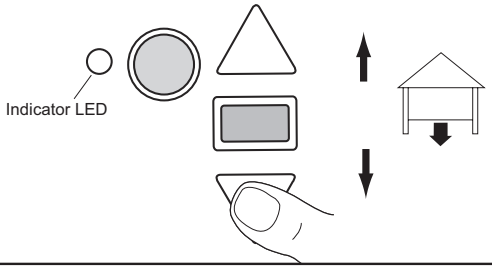

ADJUSTMENT SECTION

20 *TEST THE SAFETY REVERSE SYSTEM*

The safety reverse system test is important. Garage door must reverse on contact with a 40 mm obstacle laid flat on the floor. Failure to properly adjust opener may result in serious personal injury from a closing garage door. Repeat test once a month and adjust as needed.

Procedure: With door open place a 40 mm obstacle (1) laid flat on the floor under the garage door. Operate the door in the down direction. The door must reverse off the obstacle. If the door stops on the obstacle, remove obstacle and repeat Program the Limits and Force Steps, then repeat safety reverse test.
When the door reverses off the 40 mm obstacle, remove the obstacle and run the opener through a complete travel cycle. The door must not reverse in closed position. If it does, repeat Program the Limits and Force then repeat safety reverse test.

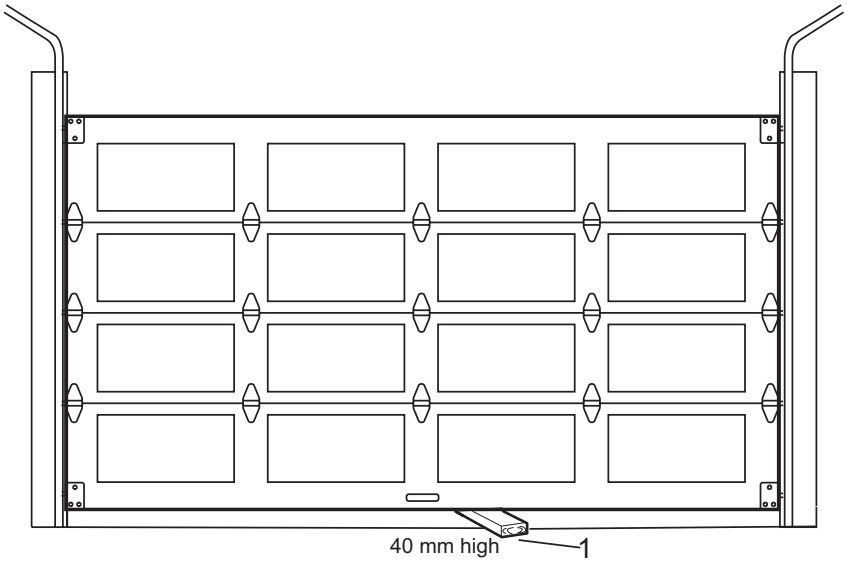

21 *THE PROTECTOR SYSTEM™ (IR BEAMS)*

NOTE: This accessory must be used for all installations where the closing force as measured on the bottom of the door is over 400 N (40 kgf).

NOTE: IR Beams are required on heavy door applications (150kg-350kg).

SPECIAL NOTE: Merlin strongly recommends that The Protector System™ (IR Beams) be installed on all garage door openers.

IR BEAMS: By installing IR Beams, an open door is prevented from closing if a person or object is located in the beam area. If the door is already closing, the door return to the open position. A closed door is not prevented from opening.

If the Protector System™ (IR Beams) is installed and needs to be removed, the opener will need to be reprogrammed (refer to paragraph 4 of the troubleshooting section).

To prevent entrapment, install The Protector System™ (IR Beams) no higher than 100 mm above the floor.

Disconnect power to the garage door opener before installing The Protector System™(IR Beams)

SAFETY FIRST!

Whilst Merlin have engineered safety features into your garage door opener, we urge you to consider fitting The Protector System™ (IR Beams) to your new garage door opener. In many countries these devices are compulsory to assist in preventing serious injury or property damage. For your own peace of mind and the safety of others please install this inexpensive safety device.

22 *PROGRAM TRANSMITTERS TO THE OPENER LIGHT*

NOTE: Do not use the same transmitter button that has been previously learned to the garage door opener for operation.

To Program your transmitters to operate your garage door opener light follow the below steps:

1. Press and release the **LEARN** button, and the “courtesy light” will flash twice (fig.1).
2. Press and release the **PROG** button and the garage door opener will go into courtesy light learn mode for 30 seconds (fig.2).
3. Press any transmitter button (fig.3) to learn this button to the garage door opener courtesy light. The garage door opener courtesy light will flash once and the indicator LED will go out.

The transmitter is now learnt to the garage door opener courtesy light.

fig.1

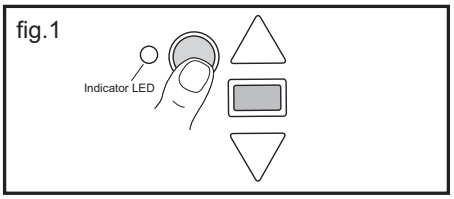

fig.2

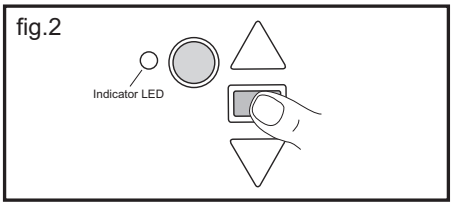

fig.3

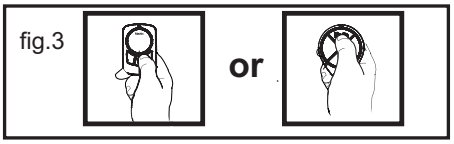

To Erase all Transmitter Codes

1. Press and hold the **LEARN** button on the opener until the courtesy light flashes twice, and continue holding for approximately 8 seconds, until the courtesy light flashes twice again.
2. Release the button, all codes are now erased.

NOTE: Erasing all transmitter codes, as in the Wireless programming section, will also delete this feature.

23 *ADJUSTABLE COURTESY LIGHT TIME CHANGE*

This feature will allow you to adjust the garage door opener light **ON** time as desired. The courtesy light **ON** time is factory default set to 3 minutes.

NOTE: Every time you enter into program mode the unit will start at the default time of 3 minutes.

1. Press and release the **LEARN** button (fig.1), and the indicator LED will turn on solid.
2. Press and release the **PROG** button twice (fig. 2). The courtesy light will flash once. The garage door opener is now in courtesy light “time selection mode” for 30 seconds*.
3. Press the **UP** arrow button (fig. 3) to increase the courtesy light **ON** time:
   - 1 press of the **UP** arrow button will change the courtesy light **ON** to 5 minutes.
   - 2 presses of the **UP** arrow button will change the courtesy light **ON** time to 10 minutes.
4. Press the **DOWN** arrow button (fig.4) to decrease the courtesy light **ON** time:
   - 1 press of the **DOWN** arrow button will change the courtesy light **ON** to 1.5 minutes.
   - 2 presses of the **DOWN** arrow button will change the courtesy light **ON** time to 30 seconds.

   NOTE: The courtesy light will flash once each time the "UP" or "DOWN" arrow button is pressed.
5. Press **PROG** button (fig.5) to save the settings. The courtesy light flashes twice.

   NOTE: If after 30 seconds no button is pressed, the garage door opener will exit from program mode and the courtesy light will flash 5 times. No settings will have been saved.

fig.1

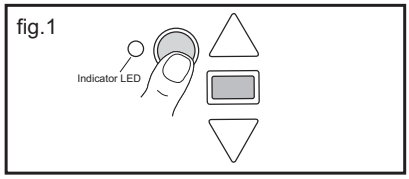

fig.2

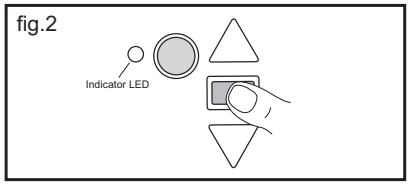

fig.3

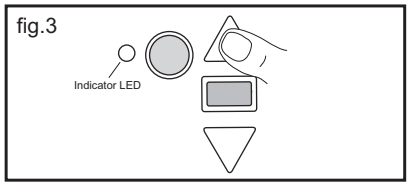

fig.4

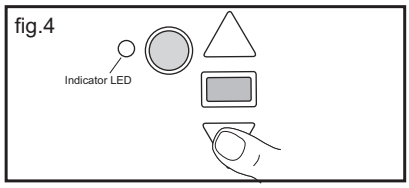

fig.5

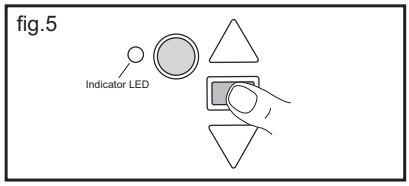

24 TIMER TO CLOSE FEATURE (TTC)

Door may operate unexpectedly, therefore do not allow anything to stay in the path of the door.

The Timer to Close feature requires The Protector System™ (IR Beams) to be installed.

Operation:

This feature allows the door to automatically close from a fully open position after a specified time. The delay can be set from 10 to 180 seconds in 10 second increments, by using the opener control buttons.

If the door encounters an obstruction while closing, the door will stop and return to the UP position. The Courtesy lamp will then flash 10 times.

To Activate TTC, or change a preset time:

1. Start with the door fully **CLOSED.**
2. Enter into TTC Activation mode by pressing both **PROG** and **DOWN** buttons together for 3 seconds (fig.2). Release when the courtesy light flashes twice.
3. Press the **UP** button once for each 10 second increment required of TTC (fig.3. eg. twice for 20 seconds). Press the **DOWN** arrow to reduce, if needed.
4. Press and release the **PROG** button to save this time (fig.4), courtesy light will flash once. TTC is now activated.

TEST: Operate the door to the UP position. Keep clear of the IR Beams and check the door closes after the preset time.

To Deactivate TTC:

1. Enter into TTC Activation mode by pressing both **PROG** and **DOWN** buttons together for 3 seconds (fig.2). Release when the courtesy light flashes twice.
2. Press and release the **PROG** button to save (fig.4), courtesy light will flash once. TTC is now deactivated.

fig.1

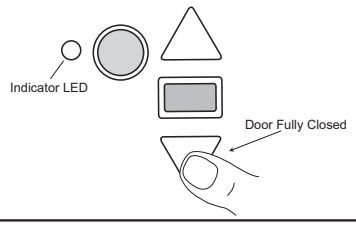

fig.2

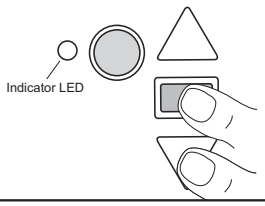

fig.3

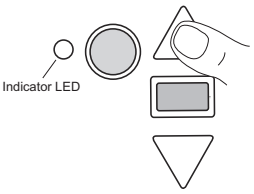

fig.4

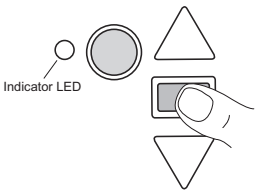

fig.5

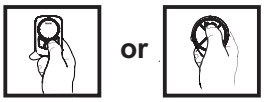

25 INSTALLING YOUR E148M FOUR BUTTON WIRELESS WALL MOUNT REMOTE CONTROL

NOTE: The wall control supplied with your opener should be pre-programmed.
If adding a new wall control, program into the opener before mounting the unit as detailed in Wireless Programming.

Disconnect power to the opener before installing this accessory to prevent accidental activation. Locate minimum 1.5 m above the floor.

To install:

- Using a small screwdriver, depress the retaining clip and carefully pry open the E148M. Locate the mounting holes.
- Attach to the wall using the two screws provided. If mounting to a plaster wall, wall plugs may be required.

NOTE: Do not overtighten screws.

- Replace the front cover plate.

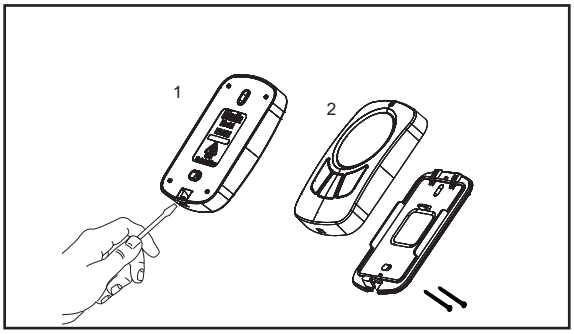

26 *PARTIAL OPENING FEATURE (PET)*

This is an adjustable, second stop position suitable for ventilation, pedestrian or pet access, programmed to the transmitter.

NOTE: Do not use the same transmitter button that has been previously learned to the garage door opener for operation or courtesy light.

To Activate this feature:

1. Start with the door fully **CLOSED** (fig.1). Operate the opener UP (fig.2) and stop at the position required for **PET** access.
2. Enter PET activation mode by pressing the **PROG** and **UP** buttons together for 3 seconds (fig.3). Release when the courtesy light flashes once.
3. Press the transmitter button that you have allocated for this feature (fig.4). Do not use the button already allocated for normal operation. The courtesy light will flash once when the code is accepted.

TEST: Press the transmitter once, and door will close, press again, and door will return to the preset position. If the door is above the preset position, when the button is pressed, it will fully close.

To Deactivate this feature:

1. Start with the door fully **CLOSED.**
2. Enter PET deactivation mode by pressing the **PROG** and **UP** buttons together for 3 seconds (fig.3). The courtesy light will flash twice, indicating the deactivation has occurred.

fig.1

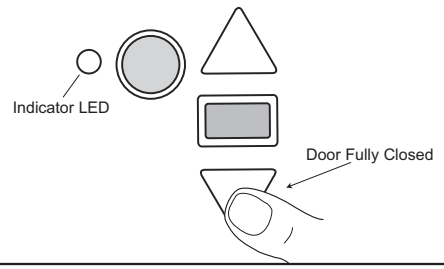

fig.2

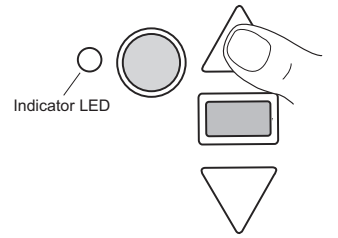

fig.3

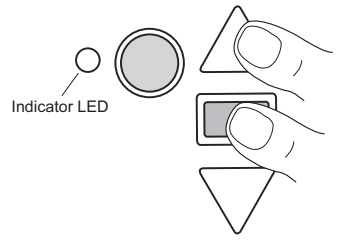

fig.4

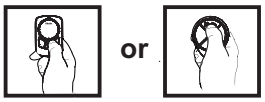

NOTE: Erasing all transmitter codes, as in the Wireless programming section, will also delete this feature.

27 *INSTALL WARNING LABELS*

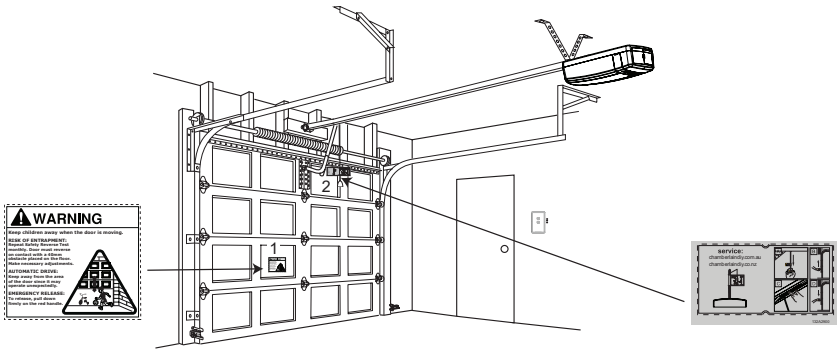

Two warning labels are provided with this opener: attach as indicated in the fig 1 to a clean and suitable surface.

1. Warning and Risk of entrapment: (1).
2. EMERGENCY Release/Service label: - place on the Manual Release cord (2).

28 *WIRELESS PROGRAMMING (OPTIONAL ACCESSORIES)*

Activate the opener only when door is in full view, free of obstruction and properly adjusted.
No one should enter or leave garage while door is in motion.
Do not allow children to operate push button(s) or transmitter(s). Do not allow children to play near the door.

NOTE: The transmitter(s) and wireless wall button supplied with your opener are preprogrammed.

If you purchase additional transmitters, the garage door opener must be programmed to accept the new transmitter code.

Program the Receiver to Match Additional Transmitter Codes:

Using the yellow LEARN Button

1. Press and Hold the button on the hand-held transmitter that you wish to use.
2. Press and release the yellow **LEARN** button on the opener.
3. Release the transmitter button when the opener light flashes. It has learnt the code. If you release the transmitter button before the opener light flashes, the opener has not learned the code.

Now the opener will operate when the transmitter button is pressed.

To Erase all Transmitter Codes

1. Press and Hold the yellow **LEARN** button on the opener until the indicator LED goes **ON**, and continue holding for approx. 6 seconds, until the indicator LED goes **OUT**.
2. Release the button, all codes are now erased.

Wireless Keypad E840M

To set the keyless entry PIN:

1. Locate the yellow **LEARN** button on the garage door opener.
2. Press and release the yellow **LEARN** button. The LED indicator light will glow steadily.
3. Enter a 4-digit personal identification number (PIN) of your choice on the keypad.
4. Press and release the ENTER button. The opener light will flash once.

To change an existing keyless entry PIN:

1. Enter the existing programmed PIN that you want to change.
2. Press and hold the # button until the courtesy light flashes twice.
3. Enter the new 4-digit PIN of your choice, then press the ENTER button. The light will flash once.
4. To test, enter the new PIN, then press the ENTER button. The garage door opener will activate.

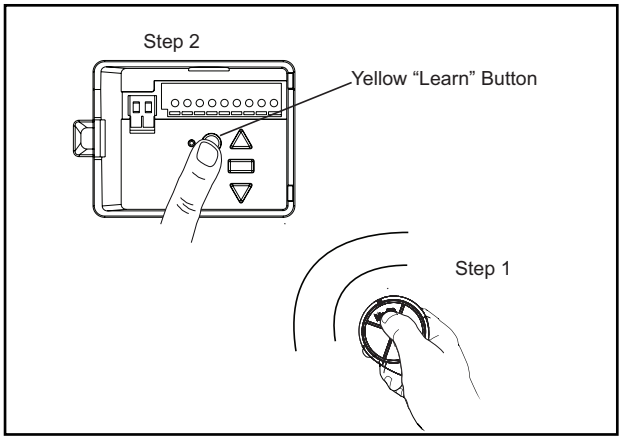

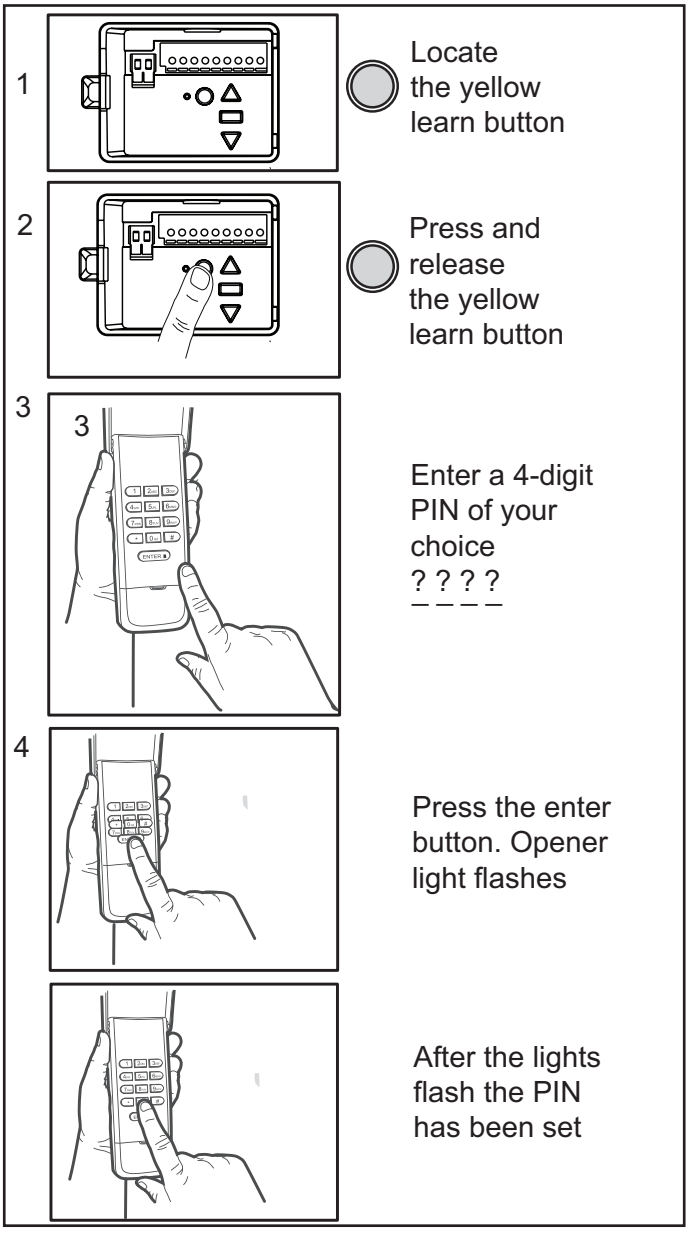

MAINTAINENCE AND CARE OF YOUR OPENER

29 USING YOUR OPENER

Automatic Operation

Your opener can be activated by any of the following devices:

- Opener control panel: UP and DOWN Buttons.
- An Outside Keyswitch (760E)
- Wireless Security Keypad
- A transmitter: Press and hold the programmed button until the door starts to move.

When the opener is activated by transmitter:

- If open, the door will close.
- If closed, the door will open.
- If closing, the door will stop.
- If opening, the door will stop (allowing space for entry and exit of pets and for fresh air).
- If the door has been stopped in a partially open or closed position, it will reverse direction.
- If an obstruction is encountered while closing, the door will reverse to the UP limit.
- If an obstruction is encountered while opening, the door will stop and briefly reverse.
- The IR Beams uses an invisible beam which, when obstructed, causes a closing door to open and prevents an open door from closing. It is STRONGLY RECOMMENDED for homeowners with young children.

Manual Operation

- Door should be fully closed if possible. Weak or broken springs could allow an open door to fall rapidly. Property damage or serious personal injury could result.
- **To Disengage:** Pull the manual release rope and handle down once to disconnect. This will disengage the trolley, allowing the door to be moved by hand, UP and DOWN as many times as needed.
- **To Re-engage:** Pull the manual release rope towards the motor until it springs back to its original horizontal position. This will prepare the trolley to engage with the trolley latch. Activate the opener using the control panel or transmitter. This will automatically re-engage the door to the opener.
- Do not use the manual release handle to pull the door open or closed.

Courtesy Light

The opener lights will turn on under the following conditions:

- When the opener is initially plugged in.
- When power is restored after interruption or when the opener is activated.
- Lights will turn off automatically after 3 minutes or as per the programmed courtesy light duration (See Adjustable Courtesy Light Time Change - Section 23).

30 CARE OF YOUR OPENER

Once a Month

- Manually operate door. If it is unbalanced or binding, call a qualified door technician.
- Check to be sure door opens & closes fully.
- Adjust limits and/or force if necessary.
- Repeat the safety reverse test. Make any necessary adjustments.

Once a Year

- Using a multipurpose grease, lightly grease the belt and inside the rail assembly where the trolley slides.
- Internally the opener does not require additional lubrication.

31 REPLACE BATTERIES IN TRANSMITTERS

Battery of the transmitter:

The batteries in the transmitter have an extremely long life. If the transmission range decreases, the batteries must be replaced. Batteries are not covered by the warranty.



WARNING! The wireless transmitters contain button/coin cell batteries.

- ***The battery is hazardous.***
- ***Keep new and used batteries away from children.***
- ***Do not ingest battery. Chemical burn hazard.***
- ***If the coin cell battery is swallowed or placed inside any part of the body, it can cause severe or fatal injuries in 2 hours or less.***
- ***If the battery compartment does not close securely, stop using the product and keep away from children.***
- ***If you think batteries might have been swallowed or placed inside any part of the body, call the 24-hour Poisons Information Centre on 13 11 26 in Australia, or the 24-hour National Poisons Centre on 0800 764 766 in New Zealand, or seek immediate medical attention.***
- ***Dispose of used coin/button cell batteries immediately and safely. Flat batteries can still be dangerous.***

Replacing battery (CR2032):

To replace batteryfor E970M, E980M, E964M & E960M, turn transmitter around and open the case with a screwdriver. Lift cover and lift control board below. Slide battery to one side and remove. Observe polarity of battery!

Assemble again in reverse direction.

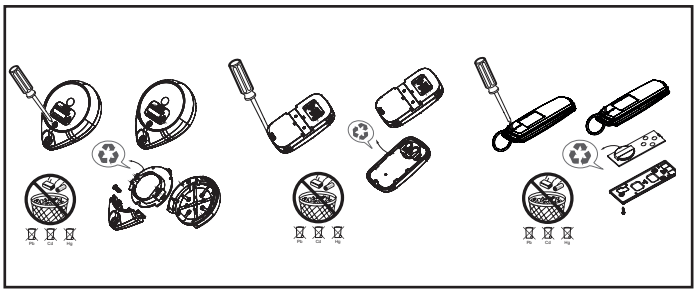

To replace battery for optional transmitters - E148M,E943M, E940M & E945M, use a screwdriver blade to pry open the case as shown. Insert battery positive side up.

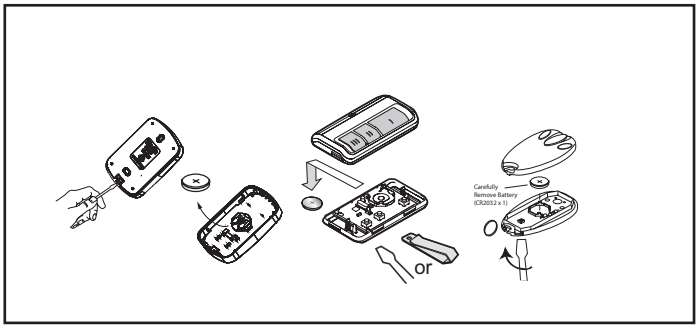

ACCESSORIES

32 *ACCESSORIES*

1. Model E148M 4 Channel wireless wall button
2. Model E970M 4 Channel transmitter
3. Model E980M 4 Channel transmitter
4. Model E964M 4 Channel transmitter
5. Model E960M 4 Channel transmitter
6. Model E840M Keyless entry system
7. Model E1702M Quick release lock
8. Model 760E Outside keyswitch
9. Model 837AU myQ Remote LED Light
10. Model M-BBU24V Battery Backup

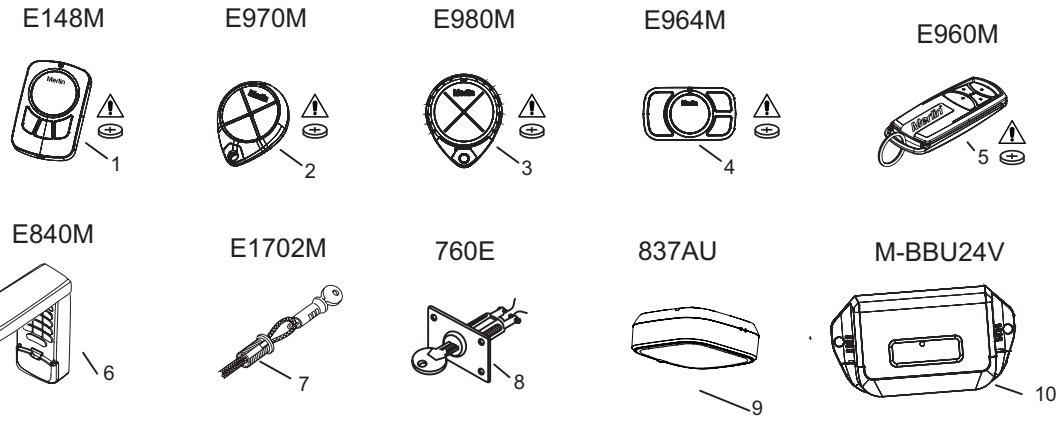

NOTE: Use of any Chamberlain Group accessories are approved to use with this opener. Only Chamberlian ANZ accessories are approved to be used with this opener. Generic compatible accessories are NOT approved for use with this opener.

33 *RAIL HARDWARE*

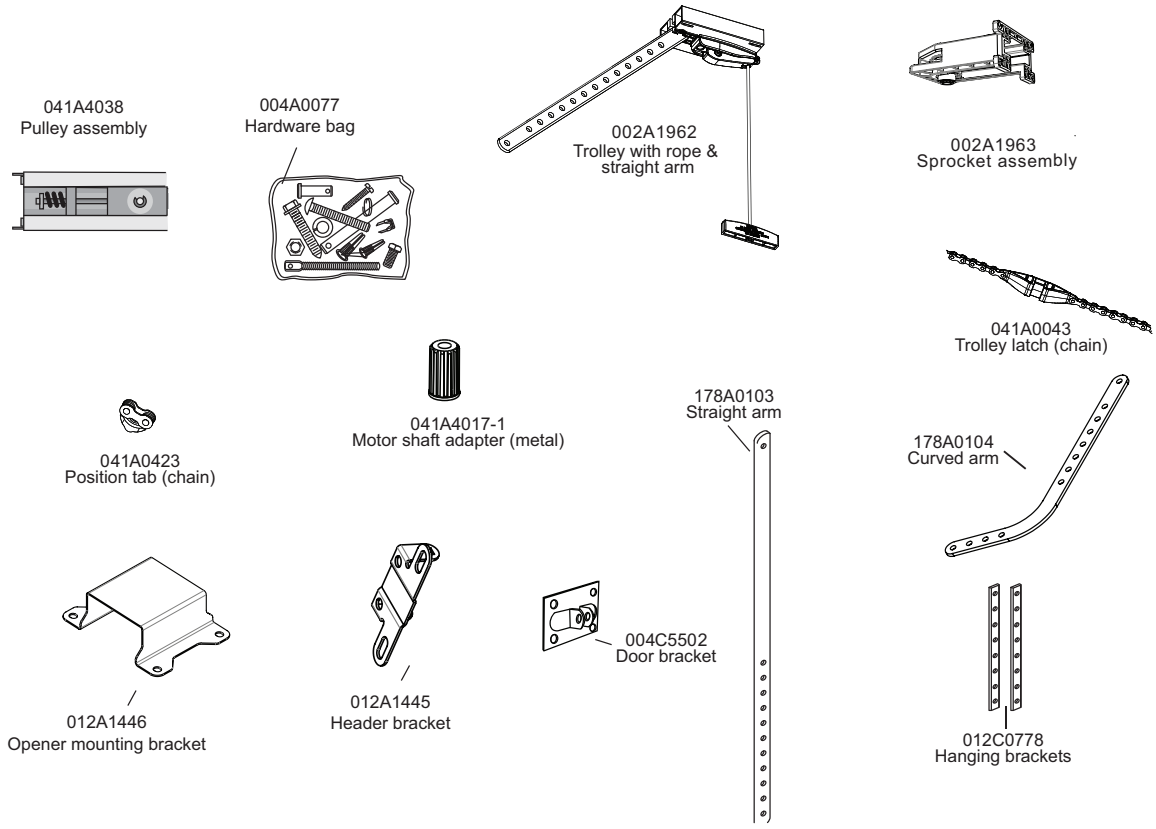

34 *REPLACEMENT PARTS*

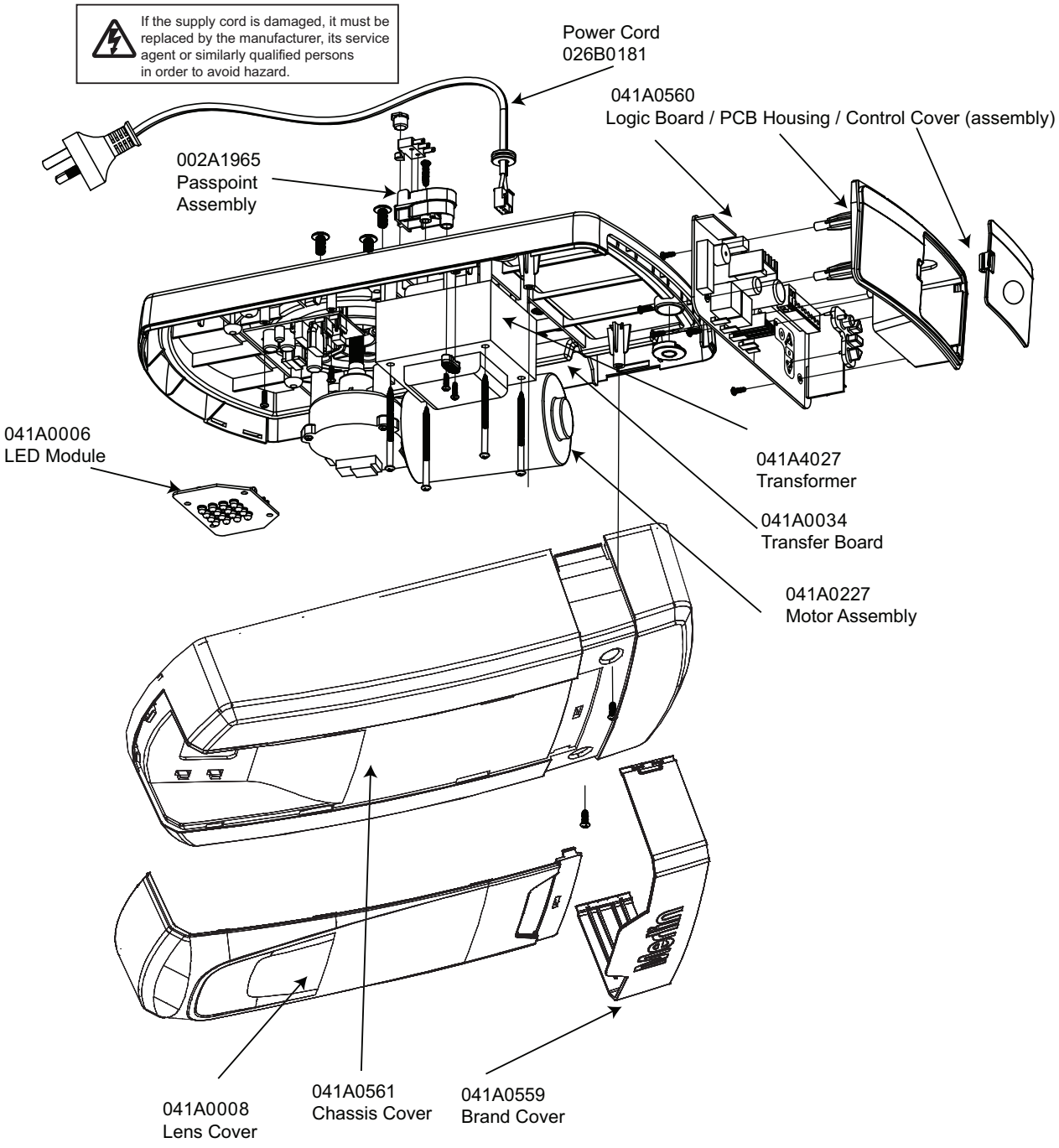

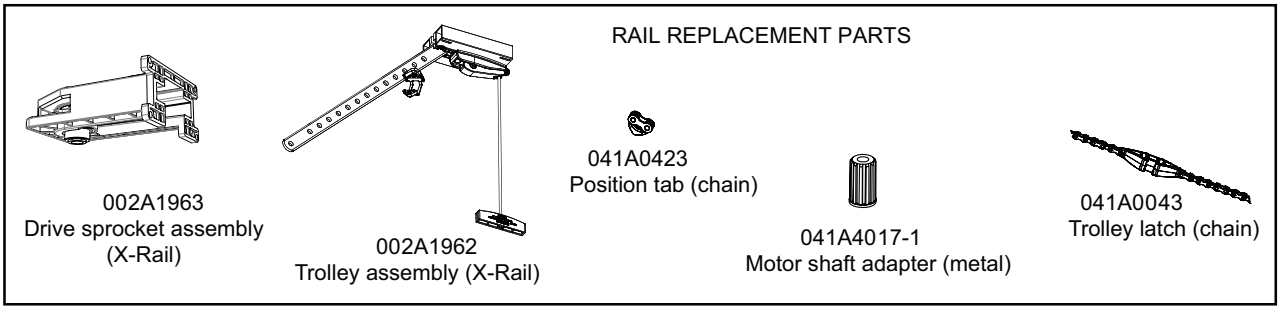

35 *TROUBLE SHOOTING*

1. Opener doesn't operate from either opener control panel or transmitter:

- Is the opener connected to electric power? Plug lamp into outlet. If it doesn't light, check the fuse box or the circuit breaker. (Some outlets are controlled by a wall switch.)
- Have you disengaged all door locks? Review installation instruction warnings on page 2.
- Is there a build-up of ice or snow under door? The door may be frozen to ground. Remove any obstruction.
- The garage door spring may be broken. Call a qualified door technician.

2. Door operates from opener control panel but not from transmitter:

- Replace batteries in the transmitter if necessary.
- If you have two or more transmitters and only one operates, review Program Your Opener, Transmitter and Keyless Entry.

3. Transmitter has short range:

- Check the battery in the transmitter is fully charged.
- Change the location of the transmitter in the car.
- A metal garage door, foil-backed insulation or metal siding will reduce the transmission range.

4. Door reverses for no apparent reason and opener light flashes 10 times:

Check WBKIT-M (or The Protector System™ (IR Beams) if you have installed this accessory. If the light is flashing, the beams are obstructed or not aligned. Remove the obstruction or correct the alignment. If the WBKIT-M (or The Protector System™ (IR Beams)) is installed and needs to be removed, the Opener will need to be reprogrammed as follows:

- Remove the IR Beam wiring from the Opener.
- When removing the WBKIT-M wiring, remove the green terminal block and re-install the original green terminal block with the link wire.
- Turn the power **OFF** for 5 seconds.
- Turn the power **ON** for 5 seconds.
- Again turn the power OFF for 5 seconds.
- Turn the power back on and test the opener for normal operation.

5. The garage door opens and closes by itself:

- Make sure transmitter button is not stuck **ON**.

6. Door stops but doesn't close completely:

- Repeat Programming the Travel Limits and Force Settings (Section 19).
- Repeat the Safety Reverse System Test (Section 20).

7. Door opens but won't close:

- Check WBKIT-M (or The Protector System™ (IR Beams) (if installed). If the light is flashing, the beams are obstructed or not aligned. Remove the obstruction or correct the alignment.
- If opener light does not flash and it is a new installation, repeat Programming the Travel Limits (Section 19).

Repeat the Safety Reverse System Test (Section 20) after the adjustment is complete.

8. Opener strains:

Door may be unbalanced or springs are broken. Close door and use manual release rope and handle to disconnect trolley. Open and close door manually. A properly balanced door will stay in any point of travel while being supported entirely by its springs. If it does not, call for professional garage door service to correct the problem.

9. Opener hums briefly, then won't work:

- Garage door springs are broken. SEE ABOVE.
- If problem occurs on first operation of opener, door is locked. Disable door lock.

Repeat Safety Reverse System Test (Section 20) after adjustment is complete.

10. Opener won't activate due to power failure:

- Pull manual release rope and handle down once to disconnect the door from the opener. This will disengage the trolley, allowing the door to be moved by hand.
- When the power is restored, pull the manual release rope towards the opener until it springs back to its original position. This will prepare the trolley to engage with the trolley latch. Activate the opener using the control panel or transmitter. This will automatically re-engage the door to the opener.
- Do NOT use the manual release handle to pull the door open or closed.
- The Quick release lock (E1702M) accessory (if fitted) will disengage the trolley from outside the garage in case of power failure.

11. The opener runs, but the carriage does not move:

- Check the manual release mechanism hasn't been disengaged. Ensure the trolley is engaged with the trolley latch. Pull the manual release rope towards the opener until it springs back to its original horizontal position. This will prepare the trolley to engage with the trolley latch. Activate the opener using the control panel or transmitter. This will automatically re-engage the door to the opener.
- In a new installation, the preassembled Motor Shaft Adapter may have fallen out of the belt sprocket assembly. This adapter is installed during the manufacturing process and may have dislodged.
- In older installations, especially on excessively heavy doors, check the Motor Shaft Adapter has not stripped.

12. The Up and DOWN arrows on the control panel are flashing in sequence:

Check the Diagnostic Chart - Section 36.

36 *DIAGNOSTIC CHART*

Your garage door opener is programmed with self-diagnostic capabilities. The UP and DOWN arrows on the garage opener flash the diagnostic codes.

DIAGNOSTIC CODE		SYMPTOM	POSSIBLE RESOLUTION
UP Arrow Flash(es)	DOWN Arrow Flash(es)		
1	1	The garage door opener will not close and the courtesy light flashes.	The Protector System™ (IR Beams) are obstructed, not installed or disconnected. Check for obstructions. Inspect The Protector System™ wiring.
1	2	The garage door opener will not close and the courtesy light flashes.	There is a short or reversed wire for the The Protector System™ (IR Beams). Check The Protector System Wiring.
1	3	The wired wall button will not function.	The wires for the wired wall button are shorted or the wired wall button is faulty. Inspect The the wire at all staple points and connection points and replace wire or correct as needed.
1	4	The garage door opener will not close and the courtesy light flashes.	The Protector System™ (IR Beams) are misaligned or were momentarily obstructed. Realign both sensors to ensure both LEDs are steady and not flickering. Make sure nothing is hanging or mounted on the door that would interrupt the sensors path while closing.
1	5	There is no door movement or motor accelerates before stopping suddenly.	No RPM pulses have been detected. Check the door manually for balance, binding or obstructions. Internally the possible cause may be the motor, logic board or RPM sensor. Try resetting door travel limits. Call a qualified door technician.
1	6	Door continues to move after the motor stops.	RPM pulses have been detected after motor has turned off. Possible broken spring. Check the door is correctly balanced and not creeping up or down. Call a qualified door technician..
2	1-5	Opener fails to operate.	Possible logic board failure. Reboot opener by turning the mains power OFF and then ON after 15 seconds. Reprogram the door travel limits and force settings. Call a qualified door technician.
2	6	Unable to set travel limit down direction. Passpoint has not been recognised during programming.	Check the passpoint module has been activated by the chain Position Tab, during the door travel. The yellow indicator LED on the control panel will flash when the passpoint has been activated during door travel. Reset the travel limits.
3	2	Unable to set the travel or retain position.	Check passpoint module or RPM sensor for proper assembly, replace if necessary.
3	3	The battery status LED* is constantly flashing green.	Battery backup charging circuit error, replace logic board *(if applicable). Check the diagnostic LED on the Battery Backup Unit (BBU) if fitted. If the battery status LED is flashing constantly green, check the BBU and/or replace the logic board.
4	1-4	The door is moving, stops and or reverses.	Manually open and close the door. Check for binding or obstructions, such as a broken spring or door lock. If the door is binding or sticking call a qualified door technician. If door is not binding or sticking attempt to reprogram travel (refer to “Program the Travel Limits and Force” section 19).
4	5	Opener runs approximately 150 mm to 200 mm, stops and reverses.	Communication error to passpoint module or RPM sensor. Check passpoint module or RPM sensor connections, replace if necessary.
5	1-4	Door fails to operate or operates erractically. External accessory wiring failure.	Check the external wiring to the control panel terminal is wired correctly. Turn off power, remove all external wiring, and retest door operation.
5	5	Door opener fails to operate.	Low internal voltage on the logic board, possible transformer, power PCB or logic board failure. Service required, call a qualified door technician.

SPECIFICATIONS

37 SPECIFICATIONS - COMMANDER PLATINUM II - MS137MYQ

Input Voltage	220-240 Vac, 50 - 60 Hz
Max. Pull Force	1300 N
Power	225 Watt
Normal Torque	8 Nm
Max. door weight	350kg with IR beams installed, slow speed mode & extruded rail
Max. lift under spring tension	20 kg
Max. door area	Residential Sectional doors 20.0m^2
Motor	
Type	DC gearmotor permanent lubrication
Noise level	54 db at 1 metre
Drive Mechanism	
Drive	Chain with one-piece trolley on extruded rail
Length of Travel	Adjustable to 3.0 m
LED light	25 Watt equivalent
Door Linkage	Adjustable door arm. Pull cord trolley release
Safety	
Personal	Push button stop in ***UP and DOWN*** direction. Automatic safety reverse in both ***UP and DOWN*** direction
Electronic	Automatic force adjustment
Electrical	Transformer overload protector & low voltage push button wiring
Limit Device	Mechanical Passpoint/RPM sensor
Limit Adjustment	Electronic
Soft-start/Soft-stop	Electronic
Dimensions	
Length (Overall)	
Headroom Required	3.24 m
Hanging Weight	50 mm
Receiver	12.5 kg
Memory Registers	
Operating Frequency	64 handset codes. 4 keypad devices - 1 code each 433.30/433.92/434.54 MHz

DON'T FORGET - WARRANTY REGISTRATION

To validate your warranty you must complete the registration form online at:

Merlin®
Powering Garage Doors

gomerlin.com.au/warranty

gomerlin.co.nz/warranty

™ Trademark of The Chamberlain Group LLC
® Registered Trademark of The Chamberlain Group LLC
© 2025 The Chamberlain Group LLC

Limited Warranty in Australia and New Zealand
Merlin® Commander Platinum II MS137MYQ

Garage Sectional Door Opener

1 Your consumer rights and guarantees

This Limited Warranty is provided by Chamberlain Australia Pty Ltd, Chamberlain New Zealand Limited (**Chamberlain**), contact details in Section 5 below. This Limited Warranty applies to the Merlin® Commander Platinum II MS137MYQ unit (Unit) purchased in Australia and New Zealand, and gives you benefits which are in addition to your consumer rights and remedies under the Australian Consumer Law (or corresponding New Zealand consumer protection laws).

You can find out more information about your consumer rights and guarantees which the law provides in Australia at **www.accc.gov.au,** in New Zealand at **www.consumerprotection.govt.nz**. We also provide this statement as required under the Australian Consumer Law:

> Our goods come with guarantees that cannot be excluded under the Australian Consumer Law. You are entitled to a replacement or refund for a major failure and for compensation for any other reasonably foreseeable loss or damage. You are also entitled to have the goods repaired or replaced if the goods fail to be of acceptable quality and the failure does not amount to a major failure.

2 What does our Limited Warranty cover?

Chamberlain warrants that, when purchased new in Australia or New Zealand, the Unit (all parts of the Unit other than globes and batteries) is free from defects in materials and workmanship (Limited Warranty) for the Limited Warranty period, subject to the terms and conditions of this Limited Warranty.

The Limited Warranty period (for Accessories see below) is 7 years (84 months) or 15,000 cycles (each opening and closing of the garage door equals 1 cycle) whichever comes first, from the date of purchase of the Unit when installed by a Professional Dealer authorised by Chamberlain in residential premises with a residential specified garage door that is designed for the sole purpose of a single-family dwelling.

The Limited Warranty period for remote controlled transmitters and accessories included with the Unit (Accessories) is 12 months from the date of purchase.

3 Limited Warranty Conditions

The following terms and conditions apply to your Limited Warranty:

- our Limited Warranty is effective from date of purchase as indicated in Section 2 above;
- proof of purchase of the Unit is required;
- purchaser must ensure the garage door is serviced by a Chamberlain authorised dealer or qualified technician annually after the date of purchase due to the large size of the garage door installed with the Commander Platinum II. If your door binds, sticks, or is out of balance, then it must not be used until serviced by a Chamberlain authorised dealer or qualified technician. The garage door service fee will be at the purchaser's expense.

Please also see the User Manual for the Unit available on our website.

4 What is not covered

- Batteries and globes are not covered under the Chamberlain Limited Warranty.
- Travel costs incurred by Chamberlain or its authorised dealer in either travelling to and from areas outside a capital city area. These costs will be at the purchaser's expense.
- Additional access costs incurred by Chamberlain or its authorised dealer in obtaining access to premises where the Unit is not readily accessible. These costs will be at the purchaser's expense.

Our Limited Warranty covers defects as explained, and does not cover all problems and mishaps that may occur in relation to the Unit including:

- when the unit is not installed within outlined specification for that unit or as outlined within the user manual;
- you got what you asked for but simply changed your mind, found it cheaper somewhere else, decided you did not like the purchase or had no use for it;
- you misused the Unit in any way that caused the problem;
- you knew of or were made aware of any deficiencies with the Unit before date of purchase;
- use of the Unit with controls or third party devices or software which has not been supplied, or pre-approved, by Chamberlain;
- problems relating to or residing in third party hardware, software or other items with which our product is used;
- any loss of data related to you or provided by you, or loss related to downtime associated with use of the product, whether through power outage, failure of internet or wireless connectivity, network disruptions, or otherwise;
- non-compliance with the relevant instructions in the User Manual;
- tampering, neglect, abuse, wear and tear, accident, electrical storm, excessive use or conditions other than normal use;
- problems with, or relating to, the garage door or garage door hardware, including but not limited to the door springs, door rollers, door alignment, hinges, guides, slats and drums;
- problems caused by electrical faults or replacement of batteries or light bulbs, blown fuses, electrical surges, power surges or power strikes, fire, flood, rain, water, lightning or storms;
- water or moisture ingress that causes corrosion or electrical malfunction;
- corrosion caused by sea air if located near a waterway, beach etc;
- fitment to a commercial door or in a commercial operating application, installation of a residential garage door opener in a commercial or industrial premises other than a single-family dwelling;
- lack of proper maintenance, service or care of the door and/or Unit; and/or
- damage caused by insects, pests or other after sale damage caused by events or accidents outside Chamberlain's reasonable control and not arising under normal and standard operating conditions.

5 Where you need help with our product

If you have a problem with the Unit or if you are concerned it may be defective, please contact our Customer Service team below:

Australia	Phone toll free 1800 638 234
Fax toll free	1800 888 121
Address	Unit 1, 75 Epping Road North Ryde, NSW 2113
Email	**customerservice@chamberlainanz.com**
Website	**www.gomerlin.com.au**
New Zealand	Phone toll free 0800 653 667
Auckland	Phone 09 477 2823
Fax toll free	0800 653 663
Email	**customerservice@chamberlainanz.com**
Website	**www.gomerlin.co.nz**

As a first step, our Customer Service team will provide product support assistance to help you try to resolve the problem and in some cases, replacement parts for "do it yourself repairs". If our technical team need to see the product to determine the nature of the fault, we will arrange an inspection by an experienced technician, or ask that you send the product to us.

If your product was installed at your premises by an authorised installer, please contact the installer indicated in your sales documents for prompt on-site service, or consult our Customer Service team if you need help in finding a local service technician. A service fee for on-site service may apply.

Authorisation from Chamberlain is required for warranty service under this Limited Warranty.

6 Delivery Charges

If an inspection is required in order to determine the nature of the fault, please send the Unit freight paid and well packaged in accordance with our instructions. Any costs associated with transporting the Unit will be at Chamberlain's cost if the Unit has breached a statutory consumer guarantee. Repairs and replacement parts provided under this Limited Warranty are free of charge (and repaired items or replacement parts for Units found to be defective will be returned to you at our cost), and warranted by Chamberlain for the remaining portion of the original warranty period. However, if you make a claim under this Limited Warranty, and this Limited Warranty does not apply, or if the law does not provide you with a statutory right or remedy as a consumer, you may be required to pay labour, assessment and/or freight costs and delivery charges to repair, replace and/or return the Unit to you.

7 How to register your product

Please register your Unit and contact details at this link www.gomerlin.com.au/warranty-registration/ for Australia, or www.gomerlin.co.nz/register-your-warranty/ for New Zealand, so that we or your authorised installer can locate your details and provide you with product support assistance as quickly as possible, and keep you up to date with product updates. Registration can also be done by contacting Chamberlain Customer Service.

8 Important Reminder

All other guarantees (other than your statutory rights and guarantees as a consumer under applicable laws) are excluded to the fullest extent that we may lawfully do so. Unless the law requires us to do so, we do not accept any other liability, such as compensation for damages, injury or loss.

Last updated: [25th October 2022]