Merlin®

CHOOSE SAFETY CHOOSE MERLIN

gomerlin.com.au

gomerlin.co.nz

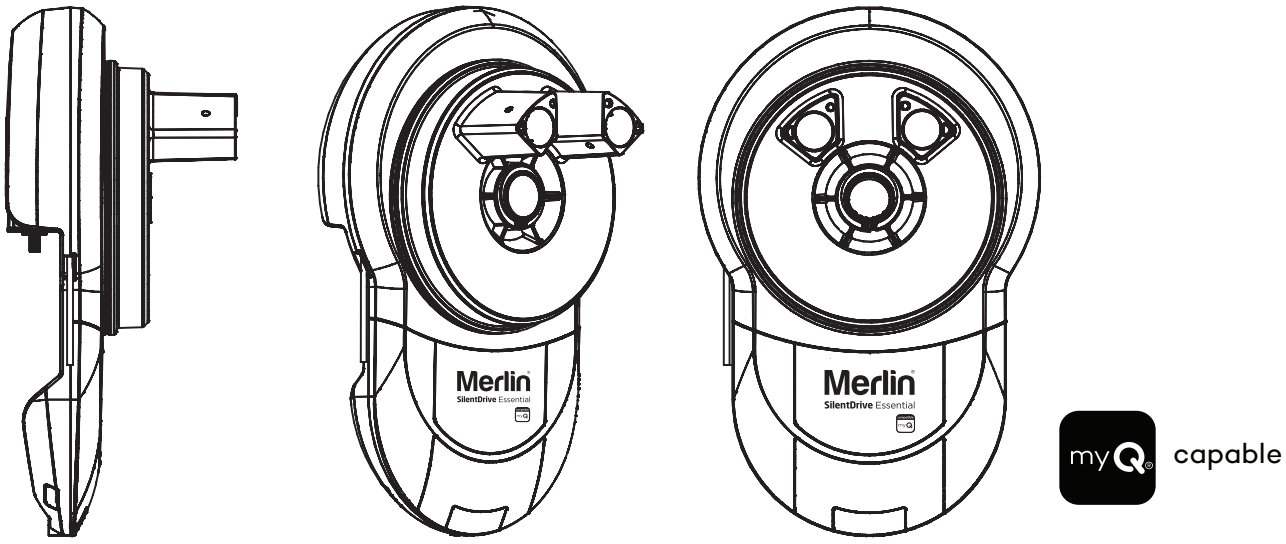

myQ capable

SilentDrive Essential

MR655MYQ

Garage Roller Door Opener

Installation and Operating Instructions

Australia

New Zealand

Owners Copy: SAVE THESE INSTRUCTIONS for future reference

This manual contains IMPORTANT SAFETY information
DO NOT PROCEED WITH THE INSTALLATION BEFORE READING THOROUGHLY

SAFETY INSTRUCTIONS

WARNING

- **Failure to comply with the following instructions may result in serious injury or property damage.**
- **Read and follow all instructions carefully.**
- **The garage door opener is designed and tested to offer safe service provided it is installed and operated in strict accordance with the instructions in this manual.**

These safety alert symbols mean WARNING : A possible risk to personal safety or property damage exists.

Keep the garage door balanced. Do not let the garage door opener compensate for a binding or sticking garage door. Sticking, binding or unbalanced doors must be repaired before installing this opener.

Do not wear rings, watches or loose clothing while installing or servicing a garage door opener. Wear gloves and suitable protective clothing where appropriate.

Frequently examine the door installation. In particular examine cable, springs and mountings for signs of wear, damage or imbalance. Do not use if repair or adjustment is needed since springs and hardware are under extreme tension and a fault can cause serious personal injury.

To avoid serious injury from entanglement, ***remove all ropes, chains and locks connected to the garage door*** before installing the door opener.

Installation and wiring must be in compliance with your local building and electrical codes.

The safety reverse system test is very important. Your garage door ***MUST*** reverse on contact with a 40 mm obstacle placed on the floor. Failure to properly adjust the opener may result in serious injury from a closing garage door. ***Repeat the test once a month and make any necessary adjustments.***

This appliance should not be used by children or persons with reduced physical, sensory or mental capablities, or a lack of experience & knowledge, unless they have been given supervision or instruction concerning use of the appliance by a person responsible for their safety.

Automatic Drive - Keep away from the area of the door as it may operate unexpectedly.

WARNING! Product includes wireless transmitters and wall controls that contain coin/button cell batteries. Keep wireless devices and batteries away from children. Battery can cause severe or fatal injuries in 2 hours or less if swallowed or placed inside any part of the body. Seek immediate medical attention if it is suspected that a coin/ button cell battery has been swallowed or placed inside any part of the body.

The opener must not be used on a wicket door (door within a door).

The Protector System™ (IR Beams) must be used for all installations where the closing force as measured on the bottom of the door is over 400 N (40 kgf). Excessive force will interfere with the proper operation of the safety reverse system or damage the garage door.

Installers must ensure that the doors are installed in a compliant manner as per AS/NZS 60335-2-95.

After installation, ensure that the parts of the door do not extend over public footpaths or roads.

Install the wireless wall control (or any additional wall control) i***n a location where the garage door is visible away from moving parts, at a height of at least 1.5 m and out of the reach of children. Do not allow children to operate push buttons or transmitters.*** Serious personal injury from a closing garage door may result from misuse of the opener.

Permanently fasten the warning labels in prominent places, adjacent to wall controls and manual release mechanisms as a reminder of safe operating procedures.

Activate opener only when the door is in full view, free of obstructions and the opener is properly adjusted. No one should enter or leave the garage while the door is in motion.

Do not allow children to play near the door or with door controls.

If the power cable is damaged, it must be replaced by the manufacturer, its service agent or similarly qualified persons in order to avoid hazard.

Disconnect electric power to the garage door opener before making repairs or removing covers.

This opener should not be installed in a damp or wet space exposed to weather.

KEEP THESE INSTRUCTIONS

NOTE: If your garage has no service entrance door, we recommend an outside quick release must be installed. This accessory allows manual operation of the garage door from outside in case of power failure.

CONTENTS	PAGE
SAFETY INSTRUCTIONS	2
CARTON INVENTORY	3
TOOLS REQUIRED	3
DOOR REQUIREMENTS	3
CONTROL PANEL	4
PREPARE & TEST THE DOOR	5
PINNING THE DOOR	6
OPERATING MANUAL RELEASE	6
INSTALLATION PROCEDURE	7-8
ADJUSTMENT & TESTING	9-10
TIMER TO CLOSE	11
PROGRAM TRANSMITTER TO OPERATE OPENER LIGHT	11

AUDIBLE BEEP	12
PARTIAL OPENING	12
WIRELESS PROGRAMMING	13
OPERATING YOUR OPENER	14
CARE OF YOUR OPENER	14
MAINTAINING YOUR OPENER	14
SPECIFICATIONS	14
WIRING	15
TROUBLESHOOTING	16
ACCESSORIES AND SPARE PARTS	17
DIAGNOSTIC CHART	18
WARRANTY	19-20

INTRODUCTION

1 CARTON INVENTORY

1. Quik start guide
2. Stop collar
3. Clamp bracket, plates, washers (2) and nuts (2)
4. E970M four button remote control (2)
5. E148M four button wireless wall mount remote control (1)
6. Opener
7. Self tapping screws (2) (for pinning the door)
8. Weight bar screws (2), washers (2) and nuts (2)
9. Warning and risk of entrapment label
10. Weight bar

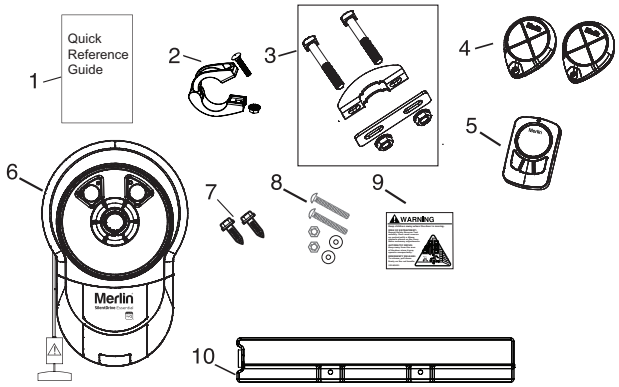

2 TOOLS REQUIRED

1. Ladder
2. Adjustable wrench for U-bolts already installed on the door
3. 8 mm socket, 10 mm socket and 13 mm extended socket and socket wrench
4. 300 mm socket extension (for minimum side-room installations)
5. Drill and 5.5 mm drill bit
6. Philips-head screwdriver
7. Marker pen
8. Rope
9. Door stand (not shown)

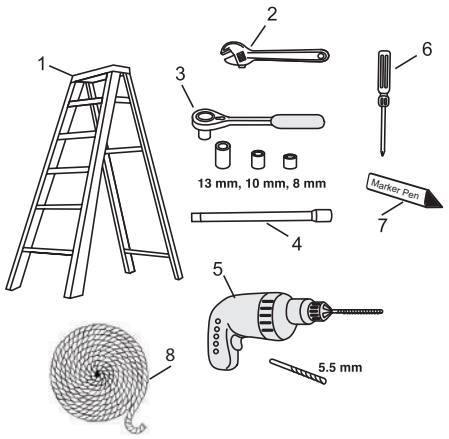

3 DOOR REQUIREMENTS

The SilentDrive Essential (MR655MYQ) is suitable for spring balanced Residential Rolling garage doors with:

- Maximum door height of 4.5 m.
- Maximum curtain area of 16.5 m^2.
- Maximum door mass of 100 kg.

*The Protector System™ (IR Beams) must be installed if the force at the edge of the closing door exceeds 400N (40 kgf).
Door axle diameter must not exceed 35 mm.

Minimum distance from edge of curtain to edge of door bracket 45 mm

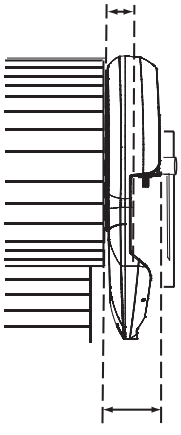

Ensure that there is at least 45 mm from the edge of the curtain to the edge of the bracket. If the roller door drum wheel is on the edge of the curtain or is a smaller diameter, additional clearance may be required.

Assemble the opener to the door axle and the existing door bracket using the U clamp assembly provided. Tighten to 25-28 Nm. Full installation process is in section 13.

4 CONTROL PANEL

1. **Terminal Block:** used for external accessories (see chart below).
   NOTE: The terminal block is behind a plastic cover in the back housing. Use a small screwdriver to lever open the plastic cover if access to the terminal block is required. All wires should be secured appropriately.

REF	FUNCTION	POLARITY	COMMENT
Red	Push button	+ve	Dry contact input for push button wired wall controls.
White	Common	-ve	Common terminal for push button, The Protector System™ (IR Beams) & accessory power.
White	Common	-ve	Common terminal for push button, The Protector System™ (IR Beams) & accessory power.
Grey	The Protector System™ (IR Beams)	+ve	The Protector System™ (IR Beams) input (pulsing type only
Green	Accessory power	+ve	24v dc 50 mA accessory output available for a universal receiver.

2. **DN Button:** used to drive the door DOWN.
3. **UP Button:** used to drive the door UP.
4. **P Button:** used to “PROGRAM” the DOOR LIMITS (see section 14).
5. **S Button:** used to “SAVE” and “DELETE” the “TRANSMITTERS” (see section 21).
6. **LEDs:**
   1. Program DOWN, and Diagnostic code indicator Number 1.
   2. Program UP indicator.
   3. Diagnostic code indicator Number 2.
7. **Control Button:** Used to activate the door when transmitters are not available. Open - Stop - Close.
8. **Courtesy Light:** turns on during operation and automatically turns off after a period of 3 minutes .

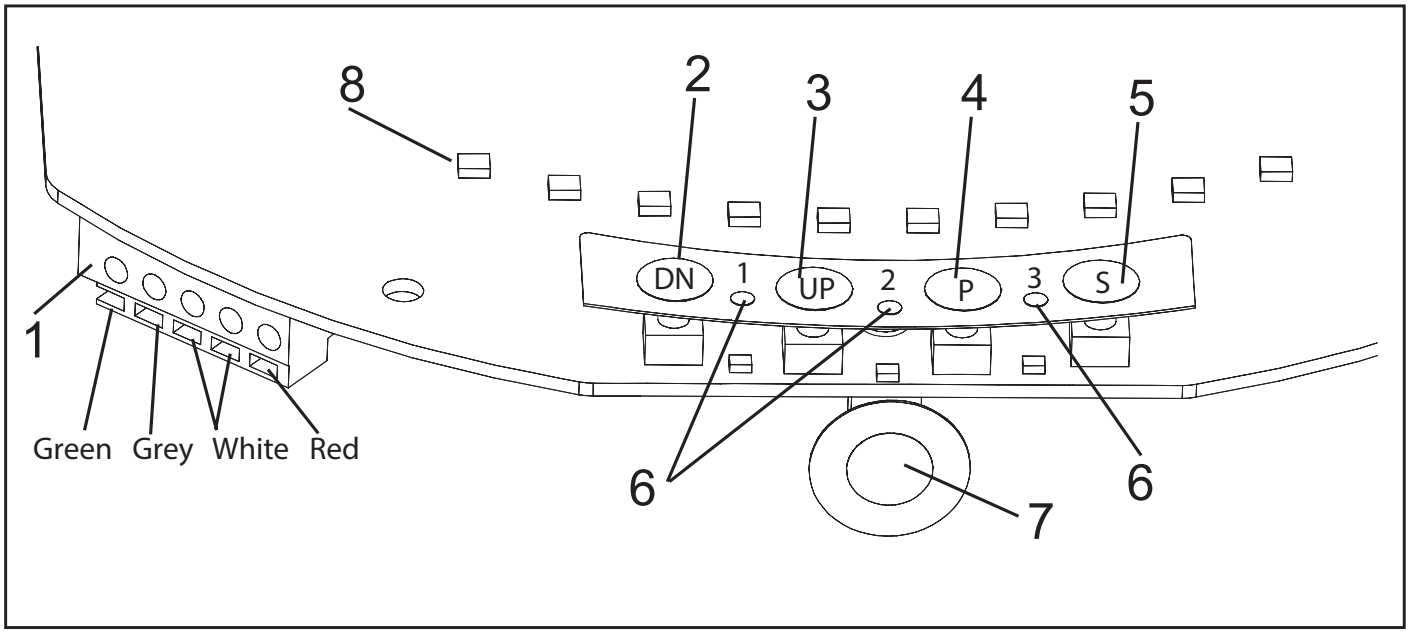

INSTALLATION

5 TESTING THE DOOR

Complete the following test to ensure your door is well balanced, and not sticking or binding:

- Disable all locks and remove any ropes connected to the garage door.
- Lift the door to about halfway and then release it. The door should remain spring balanced.
- Raise and lower the door to determine if there are any sticking or binding points (20 kgf is the absolute maximum allowable to raise or lower the door in any position).

If your door does not hold in place or the door binds or sticks, call a qualified door technician before installing the opener.

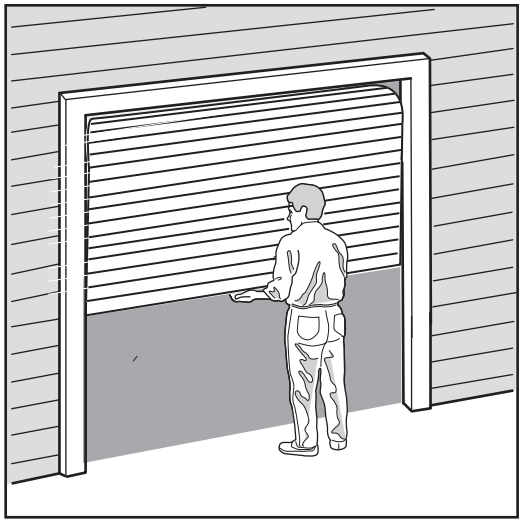

6 ATTACHING THE STOP COLLAR

- The stop collar is required to be installed on the opposite side of the door to where the opener is to be installed.
- Ensure the U-Bolt holding the door shaft to the door bracket is tightly secure.

(**NOTE:** This U-Bolt must not be removed or loosened)

- Remove the bolt assembly from the plastic stop collar. Open the collar as wide as possible and push it onto the door shaft.
- Fit the stop collar hard against the boss of the door drum. Reinstall the bolt assembly onto the stop collar and tighten.

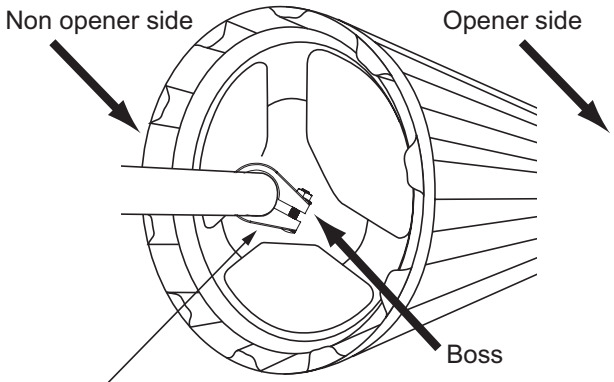

SAFETY CHECK!
Is the stop collar installed?
YES: proceed to the next step

NO: install the stop collar before proceeding

7 ATTACHING THE WEIGHT BAR

If the door has a lifting handle, remove the handle, nuts & bolts. Place the weight bar over the handle holes, insert the extended bolts through the weight bar & fasten the handle back in place.

- Place the weight bar in the centre of the door as shown.

If the door curtain does not have a handle you will need to follow these instructions:

- Use a marker pen to mark the two hole positions.
- Drill two 5.5 mm holes through the two marked positions, then place the weight bar on the inside of the door.
- Use the bolts, washers and nuts (provided) to fasten the weight bar in place.

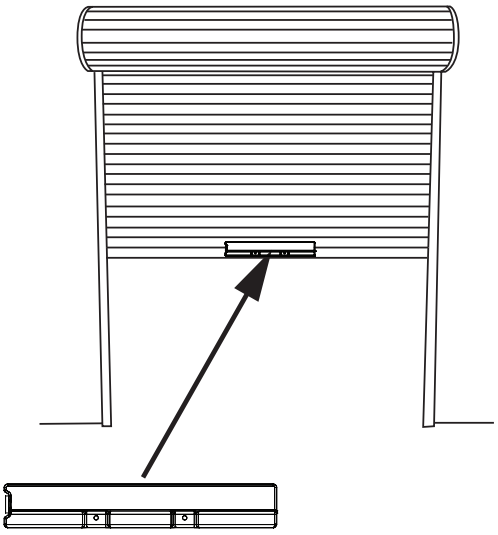

INSTALLATION

8 PINNNG THE DOOR

Note: A ballooning door may delay the safety reversal response and can compromise garage door security.

- To remedy any ballooning, insert the supplied self tapping metal screws into where the curtain leaves the roll. Secure these through the curtain into the drum wheel at each end of the roll.
- After determining the correct fastener location as shown, lift the door approximately half a turn from the closed position to allow access for securing the screws.

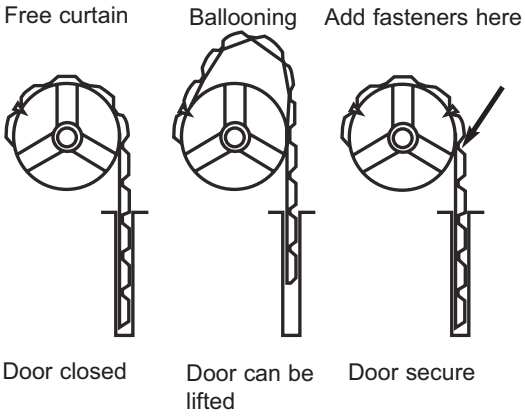

9 THE RELEASE HANDLE & CORD

Do not disengage the opener to manual operation with children, persons or other objects including motor vehicles within the doorway. The door is under significant tension and if the door has developed a fault or incorrect tension, it may be unsafe and may fall rapidly.

The manual release mechanism enables the door to be manually operated during power outages or in an emergency.

Thread the end of the rope through the loop of the manual release cable.

Adjust rope length so the handle (when installed) will be no higher than 1.8m above the floor. Secure with an overhand knot. If the door is greater than 2.5m in height the release cord extension kit is required.

NOTE: Final adjustment of handle height should be completed after the opener is installed. If it is necessary to cut the rope, heat seal the cut end to prevent unravelling.

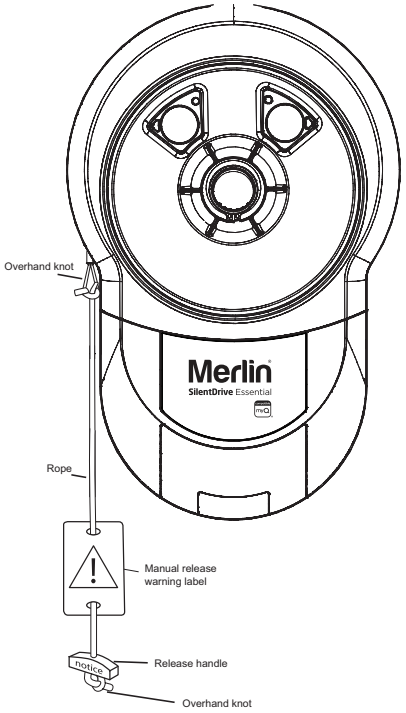

10 OPERATING THE MANUAL RELEASE

To disengage the opener
Pull the release cord down firmly,
(the opener will make a clicking noise).

To re-engage the opener
Pull the release cord down firmly,
(the opener will make a clicking noise).

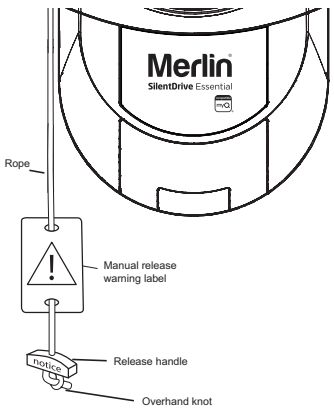

Disable all locks and remove any ropes connected to the garage door.
Take care when operating the manual release as an open door may fall rapidly due to weak or broken springs, or being out of balance.

11 *ATTACHING EXTENSION POLES (IF REQUIRED)*

Optional accessory not provided

- Insert the extension poles into the drive legs.
- Align the holes on the extension poles with the holes on the drive legs.
- Using the screws provided, secure the extension poles.
- Align the holes of the reinforcing brace with the two holes on the end of the drive legs as shown and fix in place using the screws provided. Please note that the reinforcing brace MUST be applied.

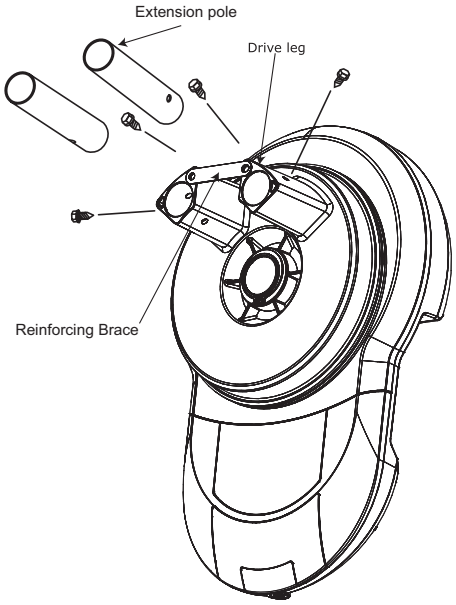

Reinforcing brace must be used. Use extension pole kit part number 002A1828.

12 *LEFT/RIGHT HAND INSTALLATION*

LEFT
(handing must be changed during limit setting - refer to section 14)

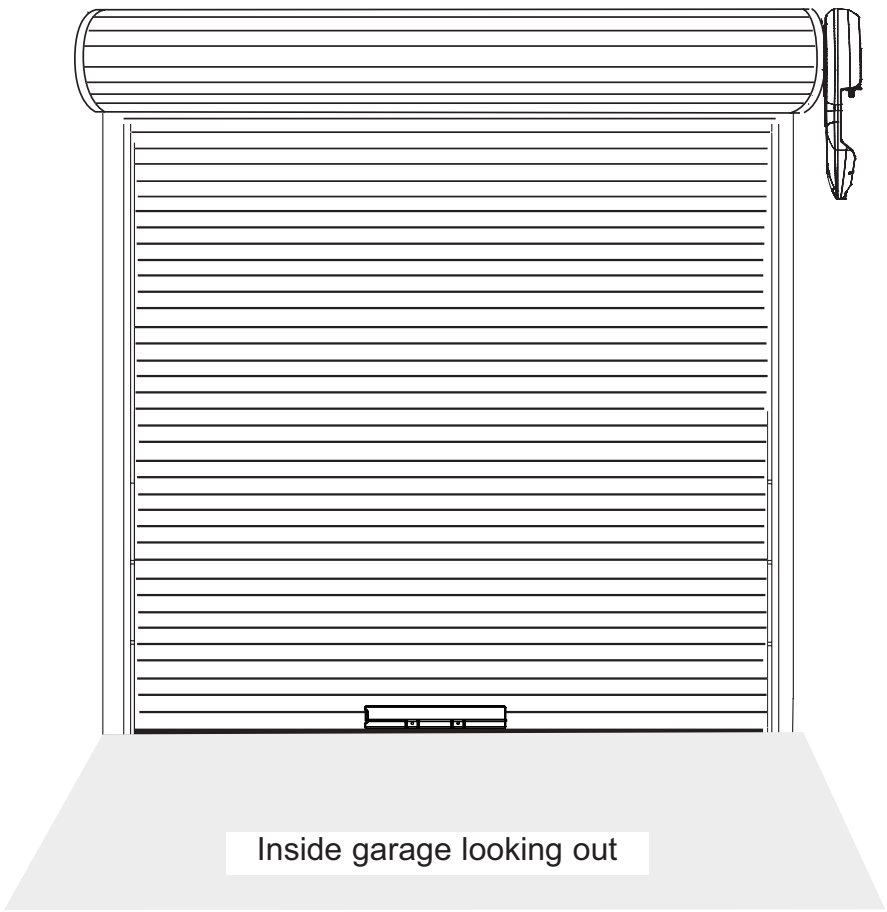

RIGHT
(factory default setting)

13 *INSTALLATION PROCEDURE*

Do not allow people to walk under or around the door during the installation process as serious injury can occur.

NOTE: The opener can be installed on either side of the door. The following instructions are for RIGHT HAND INSTALLATIONS (as illustrated i.e. inside the garage looking out). For left hand installations, reverse the instruction terminology (eg LEFT for RIGHT etc).

Preparation:

- Place the opener in manual release mode (refer to section 10).
- Completely open the roller door. For safety, tie a rope around the door.
- Ensure the door axle U-BOLT and door mounting bracket on the left hand side (non opener side) are securely fastened.
- Support the door with a door stand, ladder or similar device to safely support the door.
- Mark the position of the door shaft on the right hand door bracket (for reassembly purposes).
- While the door is supported, remove the right hand axle U-Bolt and door mounting bracket from the wall.

Install the opener:

- Slide the opener over the door axle and engage the drive legs into the door drum wheel, either side of a spoke.
- Refit the door mounting bracket to the wall.
- Clamp the opener on the door axle and door bracket in the marked position using the clamp assembly supplied (tighten to 25 – 28 Nm).
- Remove all ropes and the support stand.
- Check the operation of the door in manual mode by raising and lowering by hand. It should operate smoothly without sticking or binding. The disengage handle should already be attached less than 1.8m above the floor (refer to section 9).

Connect the power:

- Position the power cable away from the door curtain and any moving parts.
- Plug the opener into a nearby power point and turn ON.
- The opener light will turn ON and remain ON for 3 minutes.

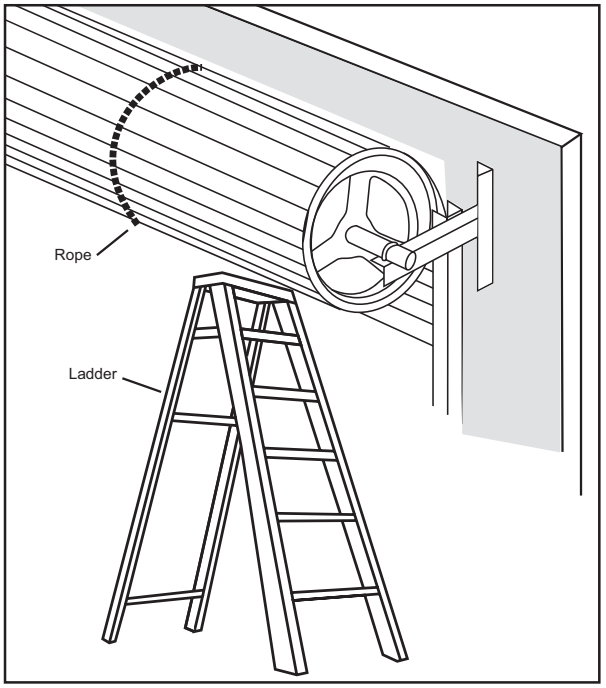

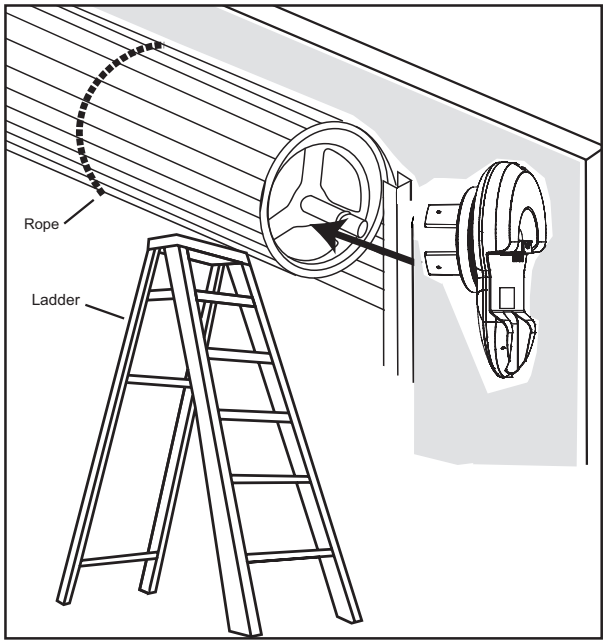

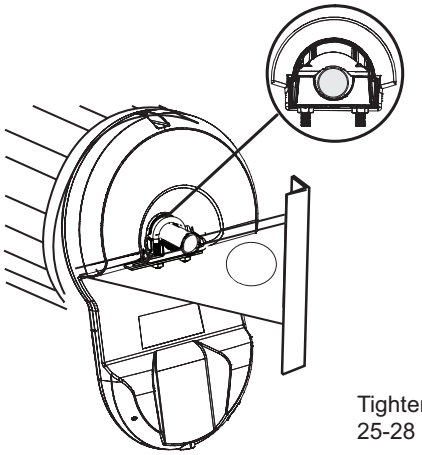

14 *SETTING THE LIIMITS FOR RIGHT OR LEFT HAD OPERATION AND FORCE*

Travel limits set how far your door goes up and down. Your opener must also be configured for right or left hand installation. If not the door will rotate in the reverse direction.

Program Buttons: The Control Panel diagram in section 4 identifies the Control Buttons and LED layout

Audible Beep: An audible “BEEP” also occurs with each button press. This feature can be turned OFF

Courtesy light: During the programming sequence, the courtesy light will flash at half strength

NOTE: The SilentDrive Essential (MR655MYQ) opener is factory configured for right hand installation.

the opener will operate during this procedure. Make sure the door is clear of obstruction. Ensure your hands are away from any moving parts before activating the door.

Setting the Right or Left Hand Operation:

Refer to the diagrams on the right for guidance.
Ensure the door is positioned halfway and the opener is engaged (out of manual mode).
Turn the opener Power **ON**, the courtesy light will turn ON.

1. Press the “P” button for 5 seconds until LED 3 will flash, as well as LED 2 or LED 1 will flash. For Right Hand setting LED 2 will flash, and for Left Hand setting LED 1 will flash.
2. To change to the opposite setting, simply press the “S” button, and the opposite LED will flash.
3. When the correct hand setting is selected, Press and Release the “P” program button to accept this setting. (continue).

Setting the Door Limits:

4. Press and hold the “UP” button until the door reaches the desired OPEN position (You can toggle between the “UP” and “DN” buttons to move the door to the correct position. Make sure there is enough room for your vehicle to pass under).
5. Press and release the “P” program button to accept this setting.
6. Press and hold the “DN” button until the door reaches the desired CLOSED position (You can toggle between the UP and DN buttons to move the door to the correct position).
7. Press and release the “P” program button to accept this setting. (LED 2 should flash to indicate you are now in Force Learn mode).

Setting the Force Automatically:

8. Press and release the “UP” button. The door will travel to the OPEN position with LED 2 flashing.
9. Press and release the “DN” button. The door will travel to the CLOSED position with LED 1 flashing. When fully closed, LED 1 will stop flashing and the courtesy light will change to full power.

This process is now complete

Setting the Force manually: (Only perform if Limits are already set)

- Start with the door fully CLOSED.
- Press the “S” button twice to enter into force learn mode. The courtesy light will go to half strength, and LED 2 will flash quickly.
- Press and release the “UP” button. The door will travel to the OPEN position, then LED 1 will flash quickly.
- Press and release the “DN” button. The door will travel to the CLOSED position, then LED 1 will stop and the courtesy light will change to full power.

This process is now complete.

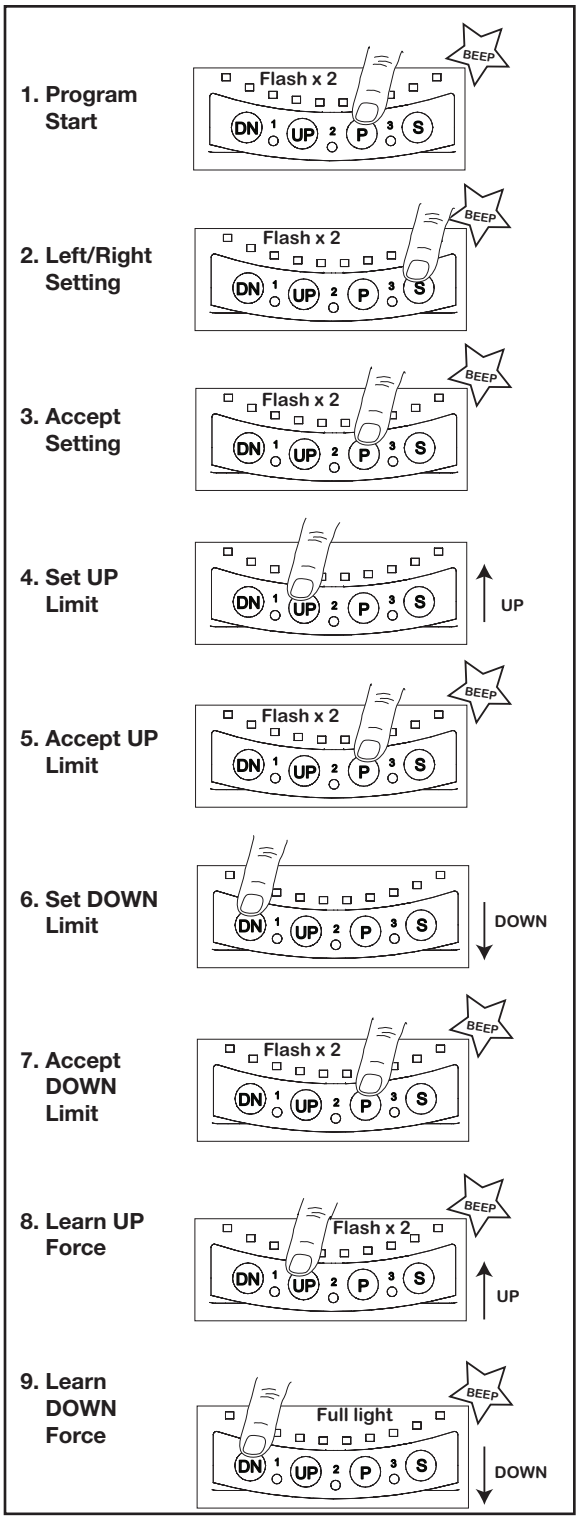

15 *TESTING THE SAFETY REVERSE SYSTEM*

The safety reverse system test is important. The garage door must reverse on contact with a 40 mm obstacle laid flat on the floor. Failure to properly adjust the opener may result in serious personal injury from a closing garage door.

Operate the door in the down direction. The door must reverse upon contact with the obstacle. If the door stops on the obstacle, remove obstacle and repeat limit and force setting (refer to section 14).

Repeat the safety reverse system test.

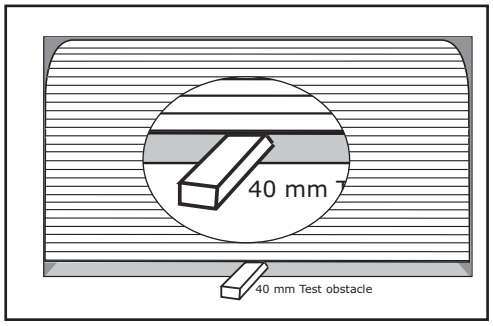

16 *FIXING WARNING LABELS*

Once you have completed your installation and successfully carried out the safety reverse system test (outlined above), install the warning labels provided with your opener as shown.

The **risk of entrapment WARNING label** MUST be installed adjacent to the release handle at a height of less than 1.8 m from the floor in a prominent place.

Any fixed wall control or wireless door control must be mounted at a height of no less than 1.5 m **out of the reach of children.**

Read the safety instructions (page 2) for further details concerning safety..

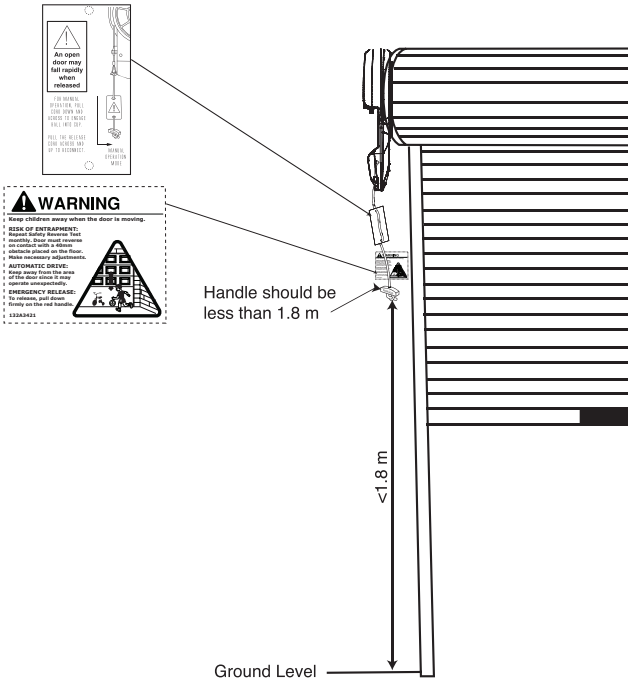

STANDARD INSTALLATION COMPLETE

PROGRAMMING

17 *TIMER TO CLOSE FEATURE (TTC)*

Auto close is NOT recommended for households with young children.personal injury from a closing garage door.

TIMER TO CLOSE feature: (TTC) 10 to 180 seconds.
NOTE: The Protector System™ (IR Beams) MUST be installed before TTC will operate.
The Timer to Close feature allows the door to automatically close after a specified time period. During the OPEN door waiting period, the courtesy light will flash continuously.
If the door encounters an obstruction while closing, the opener will return to the OPEN position and the TTC will begin again.

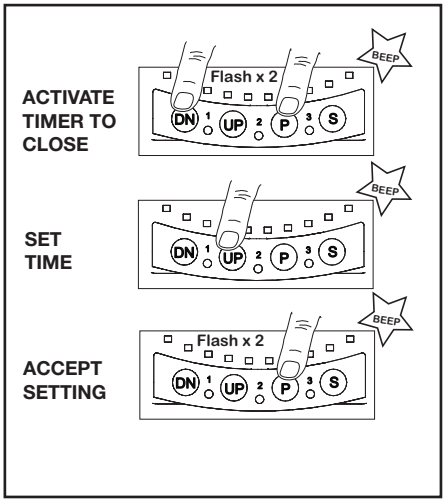

To activate the Timer to Close:

- Start with The Protector SystemTM (IR Beams) installed and the door fully CLOSED.
- Press and Hold both “P” and “DN” buttons for 3 seconds. When the Courtesy light flashes “TWICE”, release both buttons.
- Press the “UP” for each 10 second interval required for Timer to Close. A “BEEP” will register for each press. “DN” button will reduce the count if needed.
- Press and release the “P” button to accept this setting.

To deactivate the Timer to Close:

- Start with the door fully CLOSED.
- Press and Hold both “P” and “DN” buttons for 3 seconds. When the courtesy light flashes “TWICE”, release both buttons.
- Press and release the “P” button to accept this setting.

The door may operate unexpectedly, therefore do not allow anything to obstruct the path of the door.

SAFETY FIRST!

Whilst Merlin have engineered safety features into your garage door opener, we urge you to consider fitting The Protector System™ (IR Beams) to your new garage door opener. In many countries these devices are compulsory to assist in preventing serious injury or property damage. For your own peace of mind and the safety of others please consider installing this safety device.

CHOOSE SAFETY = CHOOSE MERLIN

18 *PROGRAM TRANSMITTERS TO THE OPENER LIGHT*

To program your transmitters to operate your garage door opener light follow the below steps:

NOTE: Do not use the same transmitter button that has been previously learned to the garage door opener for operation.

1. Press and release the “S” button, and the “courtesy light” will flash twice (fig.1).
2. Press and release the “P” button and the garage door opener will go into courtesy light learn mode for 30 seconds (fig.2).
3. Press any transmitter button (fig.3) to learn this channel to the garage door opener courtesy light, the garage door opener "courtesy light" will flash twice.

The transmitter is now learnt to the garage door opener courtesy light.

fig.1

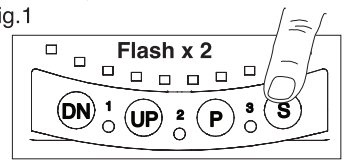

fig.2

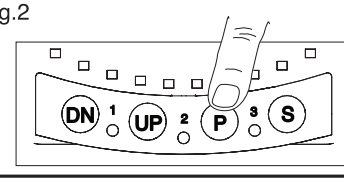

fig.3

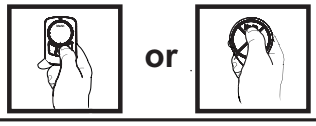

To Erase all Transmitter Codes

1. Press and hold the “S” button on the opener until the courtesy light flashes twice, and continue holding for approximately 8 seconds, until the courtesy light flashes twice again.
2. Release the button, all transmitter codes are now erased.

19 *AUDIBLE BEEP (OPTIONAL)*

The SilentDrive Elite (MR855MYQ) has been factory set for an audible "BEEP".

The Audible beep can be turned OFF by using the following method.

- Start with the door fully CLOSED.
- Press and Hold both "S" and "DN" buttons for 3 seconds.
- The courtesy light will flash "TWICE".

Release the buttons.

To turn the audible beep back ON, simply repeat the above process.

AUDIBLE BEEP

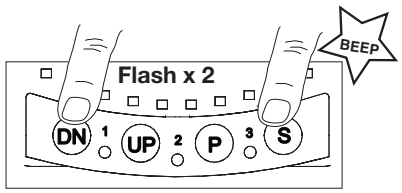

20 *VENTILATION MODE - PARTIAL OPENING FEATURE*

This is an adjustable, second stop position, that can be pre-set, partially open for ventilation, pedestrian or pet access, programmed to the Transmitter.

To activate the ventilation mode:

1. Start with the door fully **CLOSED** (figure 1). Drive the opener UP and stop at the position required for you wish to set the door at.
2. Enter ventilation activation mode by pressing the P and UP buttons together for 3 seconds (figure 2). Release when the courtesy light flashes once.
3. Press the transmitter button that you have allocated for this feature (figure 3). Do not use the button already allocated for normal operation. The courtesy light will flash when the code is accepted.

The transmitter will now operate to and from the "programmed" and the "fully closed position". Outside this range the transmitter will operate as normal.

To deactivate the partial opening feature:

1. Start with the door fully **CLOSED.**
2. Enter ventilation mode by pressing the **P** and **UP** buttons together for 3 seconds (figure 2). The courtesy light will flash twice, indicating that deactivation has occurred.

fig.1

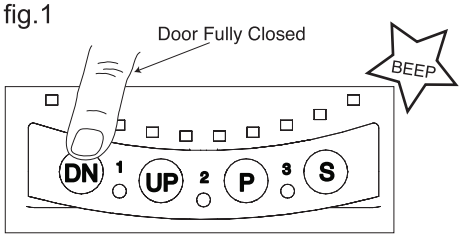

fig.2

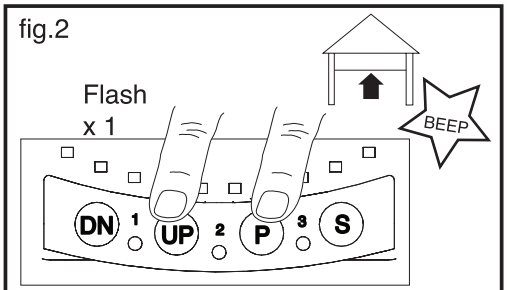

fig.3

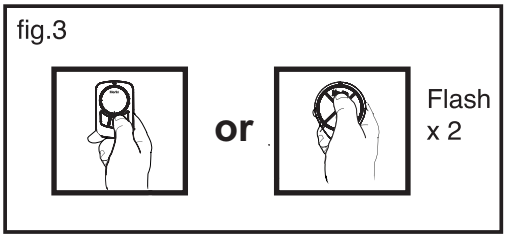

PROGRAMMING

21 *WIRELESS PROGRAMMING (REMOTE ACCESSORIES)*

NOTE: The transmitters supplied with your opener are preprogrammed by the factory.

Activate the opener only when door is in full view, free of obstruction and properly adjusted. No one should enter or leave the garage while the door is in motion. Do not allow children to operate push buttons or remotes. Do not allow children to play near the door.

If you purchase additional transmitters, the garage door opener must be programmed to accept the new transmitter code.

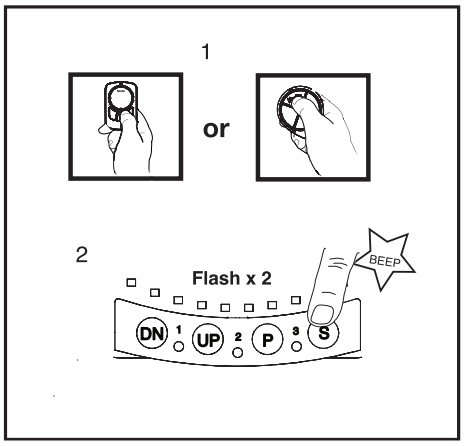

Program the receiver to match additional transmitter codes:

Using the "S" SAVE Button

1. Press and hold the button on the transmitter that you wish to use (1).
2. Press and release the "S" button on the opener (2).
3. Release the transmitter button when the courtesy light flashes twice. It has learnt the code. If you release the transmitter button before the opener light flashes, the opener has not learnt the code.

The opener will now operate when the transmitter button is pressed.

To Erase all Transmitter Codes

1. Press and hold the "S" button on the opener until the courtesy light flashes twice, and continue holding for approximately 8 seconds, until the courtesy light flashes twice again.
2. Release the button, all codes are now erased.

22 *INSTALLING YOUR E148M FOUR BUTTON WIRELESSWALL MOUNT REMOTE*

Disconnect power to the opener whilst installing this accessory to prevent accidental activation. Locate minimum 1.5 m above the floor

To install:

- Carefully pry open the E148M and locate the two screws for mounting.
- Attach to the wall using the two screws and wall anchors provided if mounting to a plaster wall. If using a recessed wall box do not use anchors.

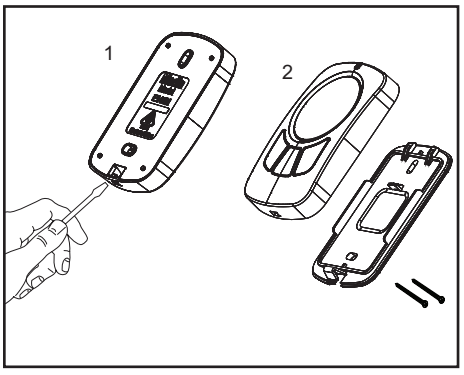

NOTE: Do not overtighten screws.

NOTE: The wall control supplied with your opener should be pre-programmed by the factory.
If adding a new wall control, program into the opener before mounting the unit as detailed in the "Wireless Programming" section.

OPERATION AND CARE OR YOUR OPENER

OPERATION OF YOUR OPENER

Your opener can be activated by any of the following devices:

- **Opener Control Panel:** UP & DOWN buttons, and O.S.C. control button.
- **Transmitter:** hold the button down until the door starts to move.
- **Wireless Entry Keypad:** This is an accessory that opens the door using a four digit keycode.

When the opener is activated:

- If open, the door will close. If closed, the door will open.
- If closing, the door will stop.
- If opening, the door will stop (allowing space for entry and exit of pets and for ventilation).
- If the door has been stopped in a partially open or closed position, it will reverse direction.

Obstruction behaviour:

- If an obstruction is encountered while closing, the door will reverse to the fully open position.
- If an obstruction is encountered while opening, the door will stop and briefly reverse.
- The Protector SystemTM (IR Beams) use an invisible beam which, when broken by an obstruction, causes a closing door to open and prevents an open door from closing. It is STRONGLY RECOMMENDED for homeowners with young children or pets.

Opening the door manually:



When releasing the door, the door should be fully closed if possible. Weak or broken springs could allow an open door to fall rapidly. Property damage or serious injury could result.

The door can be opened manually by pulling the release cord down firmly.
To re-engage the door, pull the release cord down firmly.

The opener lights will turn on under the following conditions:
when the opener is initially plugged in; when power is restored after interruption or when the opener is activated.**The opener light will turn on for 3 minutes when the opener is activated.**

CARE OF YOUR OPENER

When properly installed, your opener will operate with minimal maintenance. The opener does not require additional lubrication.

Limit and Force Settings: These settings must be checked and properly set when the opener is installed. Weather conditions may cause some minor changes in the door operation, requiring some re-adjustments, particularly during the first year of operation. Refer to limit and force setting in Section 14.

Follow the instructions carefully and repeat the safety reverse test after any adjustment.

Transmitter: Additional transmitters can be purchased at any time. Refer to chamberlaindiy.com.au or chamberlaindiy.co.nz for compatible transmitters. Any new transmitters must be programmed into the opener.

Transmitter battery: If the transmission range decreases, replace the battery.

MAINTENANCE OR YOUR OPENER

Once a Month:

- Repeat the safety reverse test (see Section 15). Make any necessary adjustments.
- Manually operate the door. If it is unbalanced or binding, call for professional garage door service.
- Check to be sure that the door opens and closes fully. Set the limits and/or force if necessary.

SPECIFICATIONS SILENTDRIVE ESSENTIAL (MR655MYQ)

Input Voltage:	220-240 VAC, 50-60 Hz, 110 W
Ratd Load:	32 Nm
Max. Pull Force:	450 N @ Ø300 mm
Max. door weight:	100 kg
Max. lift under spring tension:	20 kg
Max. door area:	16.5 m^2
Drive:	DC gear motor permanent lubrication
Max. drum rotations:	$4^1/_2$
Memory registers:	64
Operating frequency:	433.30/433.92/434.54 MHz
Operating temperature:	55^0C to -25^0C

SPECIAL NOTE: Merlin strongly recommends that The Protector System™ (IR Beams) be installed on all garage door openers.

23 TYPICAL WIRING DIAGRAM SILENTDRIVE ESSENTIAL (MR655MYQ)

Information for Service Personnel

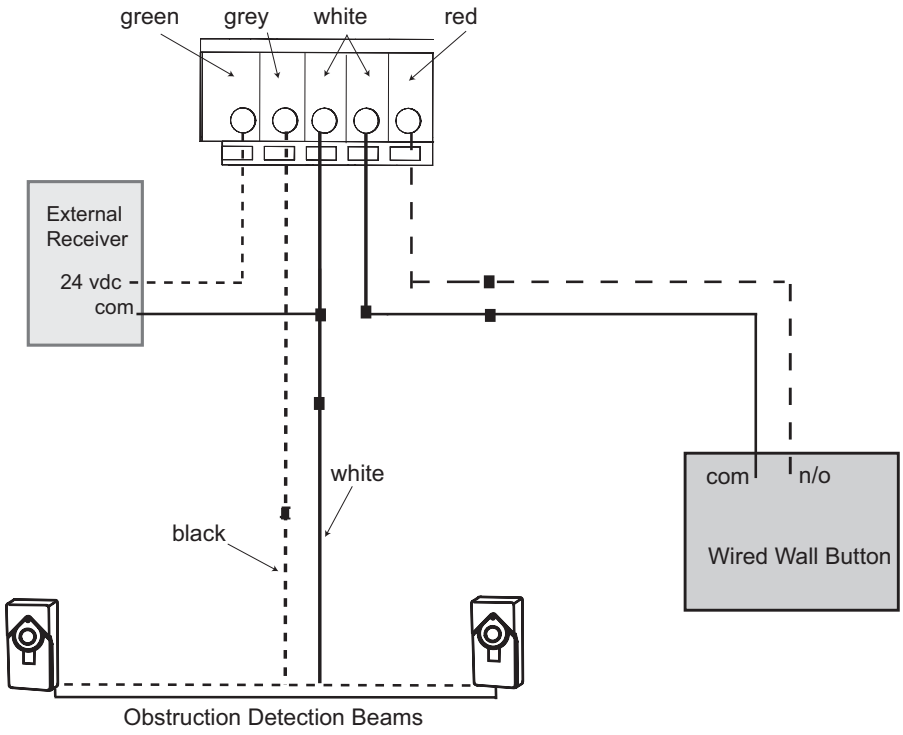

24 REPLACE BATTERIES IN TRANSMITTERS

Battery of the transmitters:

The batteries in the transmitter have a long life.
If the transmission range decreases, the batteries should be replaced. Batteries are not covered by the warranty.

WARNING! The wireless transmitters contain button/coin cell batteries.

- ***The battery is hazardous.***
- ***Keep new and used batteries away from children.***
- ***Do not ingest battery. Chemical burn hazard.***
- ***If the coin cell battery is swallowed or placed inside any part of the body, it can cause severe or fatal injuries in 2 hours or less.***
- ***If the battery compartment does not close securely, stop using the product and keep away from children.***
- ***If you think batteries might have been swallowed or placed inside any part of the body, call the 24-hour Poisons Information Centre on 13 11 26 in Australia, or the 24-hour National Poisons Centre on 0800 764 766 in New Zealand, or seek immediate medical attention.***
- ***Dispose of used coin/button cell batteries immediately and safely. Flat batteries can still be dangerous.***



Replacing battery (CR2032 or equivalent):

To replace the battery, turn the transmitter around and open the case with a screwdriver. Lift the cover and lift the control board. Slide the battery to one side and remove the old battery. Be sure to observe the polarity of the battery.

Assemble the transmitter again following the steps in reverse.

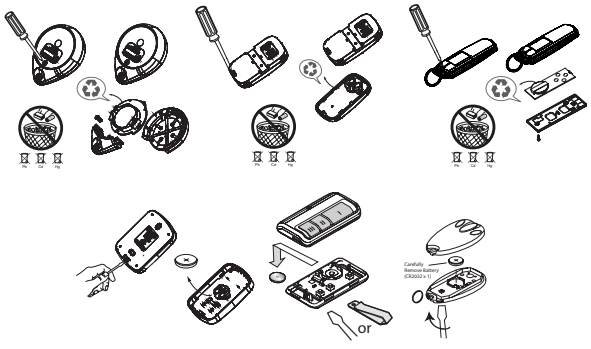

25 TROUBLESHOOOTING

1. The opener will not operate from either the UP/DOWN activation button or the transmitters:

- Does the opener have electric power? Plug a lamp into the outlet. If it does not work, check the fuse box.
- Have you disabled all door locks? Review the installation safety instruction warnings on page 2.
- Is there a build-up of ice or snow under the door? The door may be frozen to the ground. Remove any restriction.
- The garage door spring may be broken. Have it replaced by contacting a garage door repairer.

2. Opener operates from the transmitter, but not from the wired wall control terminals:

- Check that the wiring connections are correct**.**

3. The door operates from the UP/DOWN activation buttons but not from the wireless wall control or transmitter:

- Program the opener to match the transmitter code. Repeat with all transmitters.

4. The transmitter has short range:

- Change the location of the transmitter.
- Check to be sure the antenna on the bottom of the opener extends fully downward.
- Some installations may have shorter range due to a metal door, foil backed insulation, or metal garage siding.
- The batteries may be flat. Replace the batteries.

5. The garage door opens and closes by itself:

- Be sure that no transmitter buttons are being pressed.
- Clear the memory and re-program all wireless wall controls and transmitters.

6. The door reverses and stops before opening completely:

- **Is something obstructing the door? Is it out of balance, or are the springs broken? Remove the obstruction or repair the door.**

7. Door reverses for no apparent reason and opener lights flash 10 times:

- Check The Protector System™ (IR Beams) (if you have installed this accessory). If the red light on the beam is flashing, the alignment is incorrect.

1. The door opens but will not close (or reverses while closing):

- Is something obstructing the door? Pull the manual release handle. Operate the door manually. If it is unbalanced or binding, call a trained door systems technician.
- Clear any ice or snow from the garage floor area where the door closes.
- Repeat the limit and force setting. Repeat safety reverse test after adjustments.

2. The opener strains to operate the door:

- The door may be out of balance or the springs may be broken. Close the door and use the manual release to disconnect the door. Open and close the door manually. A properly balanced door will stay in any point of travel while being supported entirely by its springs. If it does not, disconnect the opener and call a trained door systems technician.

3. The opener motor hums briefly, then will not work:

- Check that the door is not in manual release mode (refer to sections 9 or 10).
- The garage door springs may be broken.
- If the problem occurs on the first operation of the opener, the door may be locked. Disable any door locks.

4. The opener will not operate due to a power failure:

- Use the manual release handle to disconnect the door. The door can be opened and closed manually. When power is restored, re-engage the opener to operate it via a transmitter.

5. The LED Indicators on the control panel are flashing in sequence:

- Check the diagnostic code in section 28.

26 ACCESSORIES

1. Model E148M 4 Channel wireless wall button
2. Model E970M 4 Channel remote control
3. Model E980M 4 Channel remote control
4. Model E964M 4 Channel remote control
5. Model E960M 4 Channel remote control
6. Model E840M Wireless keyless entry system
7. Model 774ANZ The Protector System™
8. Model E1702M Quick release lock
9. Model 760E Outside keyswitch
10. Model 827AU Remote LED light

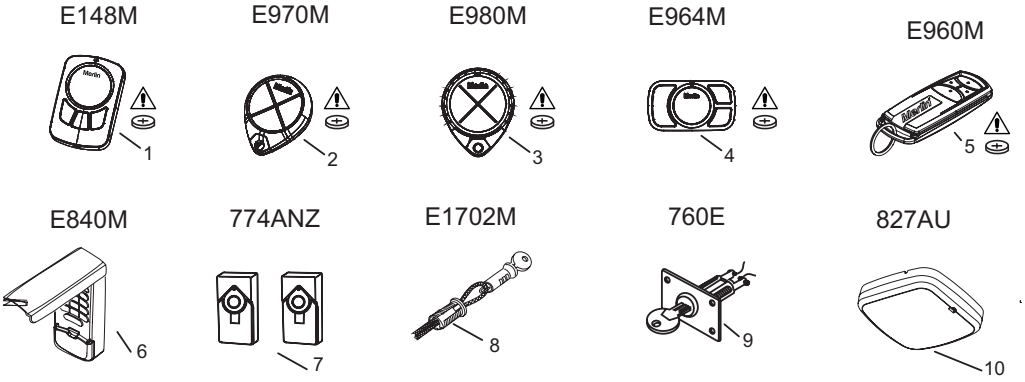

NOTE: Use of any Chamberlain Group accessoriesare approvedtouse with this opener.This includes genuine Merlin accessories. Generic compatible accessories are NOT approved for use with this opener.

27 SPARE PARTS

If the supply cord is damaged, it must be replaced by the manufacturer, its service agent or similarly qualified persons in order to avoid hazard.

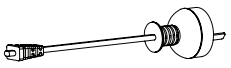

026A0189
Power cord

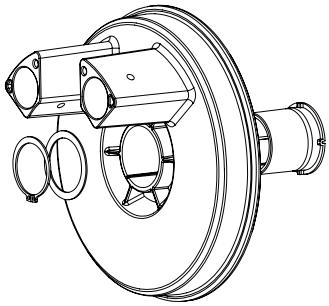

002A1956
Sungear assembly

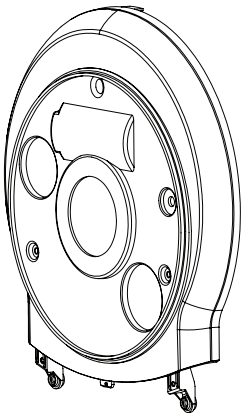

093A0877
Upper housing



002A1873
Weight bar

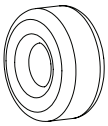

204A0307
Transformer



002A1959
APE assembly

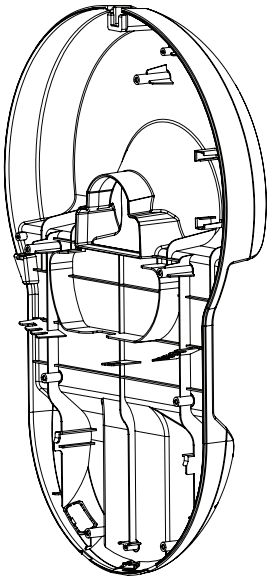

093A0880
Base housing

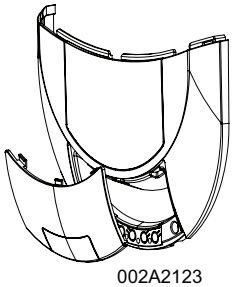

002A2123
Front lower housing assembly



002A2095
RDO clamp

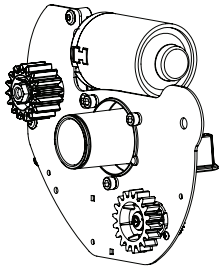

002A1958
Chassis sub-assembly



002A1960
Stop collar

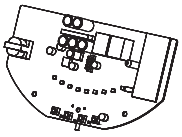

014A1462
PCB assembly

28 *DIAGNOSTIC CHART*

Your garage door opener is programmed with self-diagnostic capabilities. The indicator LED's 1 & 3 on the control panel will flash a number of times to indicate a fault code exists.

DIAGNOSTIC CODE LED1	LED2	SYMPTOM	POSSIBLE RESOLUTION
1	1	The garage door opener will not close and the courtesy light flashes.	The Protector System™ (IR beams) are open circuit or wires may be cut. Inspect sensor wires for a disconnected or cut wire. Turn power off and reboot the opener.
1	2	The garage door opener will not close and the courtesy light flashes.	There is a short circuit wire for the The Protector System™ (IR beams). Inspect The Protector System™ (IR beams) wire at all staple points and replace wire or correct as needed. Turn power off and reboot the opener.
1	3	The door control will not function.	The wires for the door control are shorted or the door control is faulty. Inspect the wire at all staple points and connection points and replace wire or correct as needed.
1	4	The garage door opener will not close and the courtesy light flashes.	The Protector System™ (IR Beams) are misaligned or were momentarily obstructed. Realign both sensors to ensure both LEDs are steady and not flickering. Make sure nothing is hanging or mounted on the door that would interrupt the sensors path while closing.
1	5	There is no door movement or motor accelerates before stopping suddenly.	No RPM pulses have been detected. Check the door manually for balance, binding or obstructions. Internally the possible cause may be the motor, logic board or RPM sensor. Try resetting door travel limits. Contact service centre.
2	1	Opener fails to operate.	Possible PCB memory failure. Reboot opener by turning the mains power OFF and then ON after 15 seconds. Reprogram the door travel limits and force settings. Contact service centre.
2	2	Opener fails to operate.	Possible PCB Voltage failure. Reboot opener by turning the mains power OFF and then ON after 15 seconds. Reprogram the door travel limits and force settings. Contact service centre.
2	4	Opener fails to operate using the transmitters	Possible receiver failure. Reboot opener by turning the mains power OFF and then ON after 15 seconds. Recode the transmitters. Contact service centre.
4	1	Door is moving down, stops and reverses.	Manually open and close the door. Check for binding or obstructions, such as a broken spring or door lock. If the door is binding or sticking contact a trained door systems technician. If door is not binding or sticking, reset the limits (refer to "Program the Travel Limits and Force" section).
4	2	Door is moving up, stops and reverses.	Manually open and close the door. Check for binding or obstructions, such as a broken spring or door lock. If the door is binding or sticking contact a trained door systems technician. If door is not binding or sticking, reset the limits (refer to "Program the Travel Limits and Force" section).

™ Trademark of The Chamberlain Group LLC
® Registered Trademark of The Chamberlain Group LLC
© 2022 The Chamberlain Group LLC

DON'T FORGET

Warranty Registration

To validate your warranty you must complete the registration form online at:

gomerlin.com.au/warranty
or
gomerlin.co.nz/warranty

Merlin®
Powering Garage Doors

Get Connected with myQ®

Additional purchase of the myQ Connectivity Kit is required to enable myQ functionality.

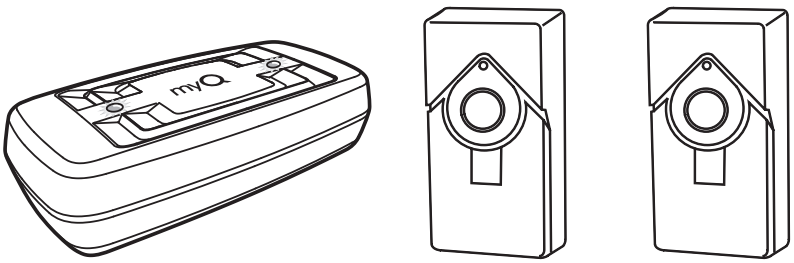

Visit www.gomerlin.com.au or www.gomerlin.co.nz for more details.

Download on the App Store GET IT ON Google Play

Limited Warranty in Australia and New Zealand
Merlin® SilentDrive Essential MR655MYQ

Garage Roller Door Opener

1 Your consumer rights and guarantees

This Limited Warranty is provided by Chamberlain Australia Pty Ltd, Chamberlain New Zealand Limited (**Chamberlain**), contact details in Section 5 below. This Limited Warranty applies to the Merlin® SilentDrive Essential MR655MYQ unit (Unit) purchased in Australia and New Zealand, and gives you benefits which are in addition to your consumer rights and remedies under the Australian Consumer Law (or corresponding New Zealand consumer protection laws).

You can find out more information about your consumer rights and guarantees which the law provides in Australia at **www.accc.gov.au**, in New Zealand at **www.consumerprotection.govt.nz**. We also provide this statement as required under the Australian Consumer Law:

Our goods come with guarantees that cannot be excluded under the Australian Consumer Law. You are entitled to a replacement or refund for a major failure and for compensation for any other reasonably foreseeable loss or damage. You are also entitled to have the goods repaired or replaced if the goods fail to be of acceptable quality and the failure does not amount to a major failure.

2 What does our Limited Warranty cover?

Chamberlain warrants that, when purchased new in Australia or New Zealand, the Unit (all parts of the Unit other than globes and batteries) is free from defects in materials and workmanship (Limited Warranty) for the Limited Warranty period, subject to the terms and conditions of this Limited Warranty.

The Limited Warranty period (for Accessories see below) is 5 years (60 months) or 10,000 cycles (each opening and closing of the garage door equals 1 cycle) whichever comes first, from the date of purchase of the Unit when installed by a Professional Dealer authorised by Chamberlain in residential premises with a residential specified garage door that is designed for the sole purpose of a single-family dwelling.

The Limited Warranty period for remote controlled transmitters and accessories included with the Unit (Accessories) is 12 months from the date of purchase.

3 Limited Warranty Conditions

The following terms and conditions apply to your Limited Warranty:

- our Limited Warranty is effective from date of purchase as indicated in Section 2 above;
- proof of purchase of the Unit is required;
- purchaser must ensure the garage door is serviced by a Chamberlain authorised dealer or qualified technician during the period 24 to 36 months after the date of purchase. If your door binds, sticks, or is out of balance, then it must not be used until serviced by a Chamberlain authorised dealer or qualified technician . The garage door service fee will be at the purchaser's expense.

Please also see the User Manual for the Unit available on our website.

4 What is not covered

- Batteries and globes are not covered under the Chamberlain Limited Warranty.
- Travel costs incurred by Chamberlain or its authorised dealer in either travelling to and from areas outside a capital city area. These costs will be at the purchaser's expense.
- Additional access costs incurred by Chamberlain or its authorised dealer in obtaining access to premises where the Unit is not readily accessible. These costs will be at the purchaser's expense.

Our Limited Warranty covers defects as explained, and does not cover all problems and mishaps that may occur in relation to the Unit including:

- when the unit is not installed within outlined specification for that unit or as outlined within the user manual;
- you got what you asked for but simply changed your mind, found it cheaper somewhere else, decided you did not like the purchase or had no use for it;
- you misused the Unit in any way that caused the problem;
- you knew of or were made aware of any deficiencies with the Unit before date of purchase;
- use of the Unit with controls or third party devices or software which has not been supplied, or pre-approved, by Chamberlain;
- problems relating to or residing in third party hardware, software or other items with which our product is used;
- any loss of data related to you or provided by you, or loss related to downtime associated with use of the product, whether through power outage, failure of internet or wireless connectivity, network disruptions, or otherwise;
- non-compliance with the relevant instructions in the User Manual;
- tampering, neglect, abuse, wear and tear, accident, electrical storm, excessive use or conditions other than normal use;
- problems with, or relating to, the garage door or garage door hardware, including but not limited to the door springs, door rollers, door alignment, hinges, guides, slats and drums;
- problems caused by electrical faults or replacement of batteries or light bulbs, blown fuses, electrical surges, power surges or power strikes, fire, flood, rain, water, lightning or storms;
- water or moisture ingress that causes corrosion or electrical malfunction;
- corrosion caused by sea air if located near a waterway, beach etc;
- fitment to a commercial door or in a commercial operating application, installation of a residential garage door opener in a commercial or industrial premises other than a single-family dwelling;
- lack of proper maintenance, service or care of the door and/or Unit; and/or
- damage caused by insects, pests or other after sale damage caused by events or accidents outside Chamberlain's reasonable control and not arising under normal and standard operating conditions.

5 Where you need help with our product

If you have a problem with the Unit or if you are concerned it may be defective, please contact our Customer Service team below:

Australia	Phone toll free 1800 638 234
Fax toll free	1800 888 121
Address	Unit 1, 75 Epping Road North Ryde, NSW 2113
Email	**customerservice@chamberlainanz.com**
Website	**www.gomerlin.com.au**
New Zealand	Phone toll free 0800 653 667
Auckland	Phone 09 477 2823
Fax toll free	0800 653 663
Email	**customerservice@chamberlainanz.com**
Website	**www.gomerlin.co.nz**

As a first step, our Customer Service team will provide product support assistance to help you try to resolve the problem and in some cases, replacement parts for "do it yourself repairs". If our technical team need to see the product to determine the nature of the fault, we will arrange an inspection by an experienced technician, or ask that you send the product to us.

If your product was installed at your premises by an authorised installer, please contact the installer indicated in your sales documents for prompt on-site service, or consult our Customer Service team if you need help in finding a local service technician. A service fee for on-site service may apply.

Authorisation from Chamberlain is required for warranty service under this Limited Warranty.

6 Delivery Charges

If an inspection is required in order to determine the nature of the fault, please send the Unit freight paid and well packaged in accordance with our instructions. Any costs associated with transporting the Unit will be at Chamberlain's cost if the Unit has breached a statutory consumer guarantee. Repairs and replacement parts provided under this Limited Warranty are free of charge (and repaired items or replacement parts for Units found to be defective will be returned to you at our cost), and warranted by Chamberlain for the remaining portion of the original warranty period. However, if you make a claim under this Limited Warranty, and this Limited Warranty does not apply, or if the law does not provide you with a statutory right or remedy as a consumer, you may be required to pay labour, assessment and/or freight costs and delivery charges to repair, replace and/or return the Unit to you.

7 How to register your product

Please register your Unit and contact details at this link www.gomerlin.com.au/warranty-registration/ for Australia, or www.gomerlin.co.nz/register-your-warranty/ for New Zealand, so that we or your authorised installer can locate your details and provide you with product support assistance as quickly as possible, and keep you up to date with product updates. Registration can also be done by contacting Chamberlain Customer Service.

8 Important Reminder

All other guarantees (other than your statutory rights and guarantees as a consumer under applicable laws) are excluded to the fullest extent that we may lawfully do so. Unless the law requires us to do so, we do not accept any other liability, such as compensation for damages, injury or loss.

Last updated: [25th Oct 2022]