Merlin®

CHOOSE SAFETY
CHOOSE MERLIN

gomerlin.com.au
gomerlin.co.nz

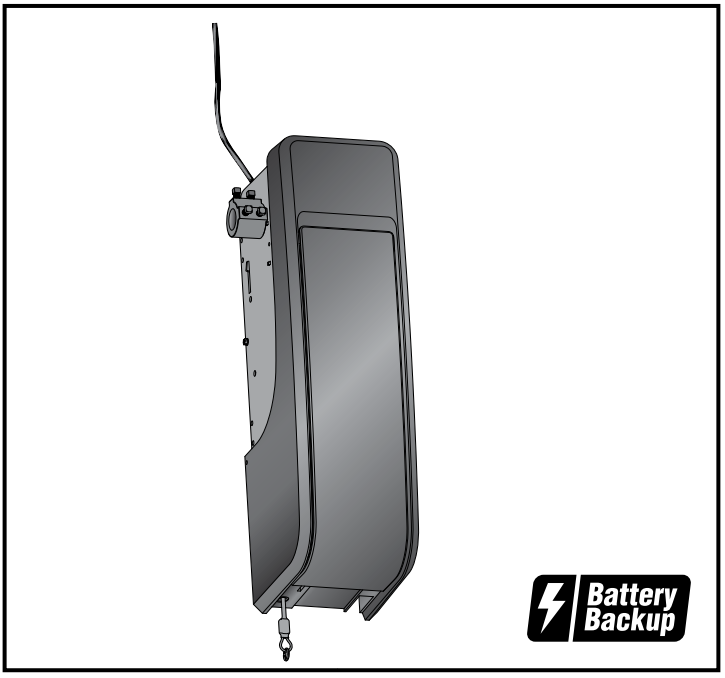

Commander Ultimate

MJ3800MYQ

Residential Sectional Wi-Fi® Garage Door Opener

Installation and Operating Instructions

Visit the Commander Ultimate landing page for:

- Product features
- Purchase compatible accessories
- Handy tips & how-to videos
- Digital copy of this manual
- Register your warranty

Australia

New Zealand

Owners Copy: Please keep these instructions for future reference

This manual contains IMPORTANT SAFETY information
DO NOT PROCEED WITH THE INSTALLATION BEFORE READING THOROUGHLY

START BY READING THESE IMPORTANT SAFETY INSTRUCTIONS

- **Failure to comply with the following instructions may result in serious personal injury or property damage.**
- **Read and follow all instructions carefully.**
- **The garage door opener is designed and tested to offer safe service provided it is installed and operated in strict accordance with the instructions in this manual.**



The safety reverse system test is very important. Mount the release handle of the emergency release at a height less than 1.8m from the floor.



Keep garage door balanced. Do not let the garage door opener compensate for a binding or sticking garage door. Sticking, binding or unbalanced doors must be repaired before installing this opener.



Do not wear rings, watches or loose clothing while installing or servicing a garage door opener. Wear gloves, safety goggles and suitable protective clothing where appropriate.



Frequently examine the door installation, in particular cable, springs and mountings for signs of wear, damage or imbalance. Do not use if repair or adjustment is needed since springs and hardware are under extreme tension and a fault can cause serious personal injury.



To avoid serious personal injury from entanglement, ***remove all ropes, chains and locks connected to the garage door*** before installing the door opener.



Installation and wiring must be in compliance with your local building and electrical codes.



The safety reverse system test is very important. Your garage door ***MUST*** reverse on contact with a 40mm obstacle placed on the floor. Failure to properly adjust the opener may result in serious personal injury from a closing garage door. ***Repeat the test once a month and make any necessary adjustments.***



Use the **Manual Release** only for the disconnection of the door from the garage door opener and - if possible - ONLY with the door closed. Operation of the emergency release can lead to uncontrolled movements of the door, if springs are weak or broken or if the door is unbalanced. Mount the release handle of the emergency release at a height less than 1.8m from the floor.



The Protector System™ must be used for all installations where the closing force as measured on the bottom of the door is over 400N (40kgf). Excessive force will interfere with the proper operation of the Safety Reverse System or damage the garage door.

SPECIAL NOTE: Merlin strongly recommends that The Protector System™ be installed on all garage door openers.



Do not use with a door incorporating a wicket door



This appliance is not intended for use by persons (including children) with reduced physical, sensory or mental capabilities, or lack of experience and knowledge, unless they have been given supervision or instruction concerning use of the appliance by a person responsible for their safety.



After installation, ensure that the parts of the door do not extend over public footpaths or roads.



Install the Smart Control Panel (wired wall control) or any additional wall control ***in a location where the garage door is visible, at a height of at least 1.5m and out of the reach of children. Do not allow children to operate push button(s) or remote(s).*** Serious personal injury from a closing garage door may result from misuse of the opener.



Permanently fasten the Warning Labels in Prominent Places, adjacent to Wall Controls and on manual release mechanism as a reminder of safe operating procedures.



Activate opener only when the door is in full view, free of obstructions and the opener is properly adjusted. No one should enter or leave the garage while the door is in motion. Do not allow children to operate push button(s) or remote(s).



WARNING: Automatic Door - The door may operate unexpectedly, therefore do not allow anything to stay in the path of the door.



Do not allow children to play near the door, or with door controls. Keep remotes away from children.



Disconnect electric power to the garage door opener before making repairs or removing covers.



If the supply cord is damaged, it must be replaced by the manufacturer, its service agent or similarly qualified persons in order to avoid hazard.



This opener should not be installed in a damp or wet space exposed to weather.



To avoid damage to very light doors (such as fibreglass, aluminium or steel doors), an appropriate reinforcement should be added. To do so, contact the door manufacturer.





WARNING! Product includes wireless transmitters and wall controls that contain coin/button cell batteries. Keep wireless devices and batteries away from children. Battery can cause severe or fatal injuries in 2 hours or less if swallowed or placed inside any part of the body. Seek immediate medical attention if it is suspected that a coin/button cell battery has been swallowed or placed inside any part of the body.

SAVE THESE INSTRUCTIONS

Table of Contents

myQ SERIAL NUMBER 3
UNATTENDED OPERATION 3
INTRODUCTION 3
Safety Symbol and Signal Word Review 3
Planning 4
Before You Connect with Your Smartphone 5
Preparing Your Garage Door 6
Tools Needed 6
Carton Inventory 7
Included Accessories 7
Hardware 7
Additional Items You May Need 7
ASSEMBLY 8
Attach the Collar to the Garage Door Opener 8
Attach Mounting Bracket to Garage Door Opener 8
ASSEMBLY 9
Wiring Diagram 9
INSTALLATION 10
Position and Mount the Garage Door Opener 10
Attach the Emergency Release Rope and Handle 11
Install Automatic Door Lock 11
Attach the Cable Tension Monitor (Required) 12
Install the Wall Control (Smart Control Panel®) 13
Install myQ Smart LED Garage Light 14
Install the Protector System™ 15
Connect Power 18
Install the Battery Backup 19
ADJUSTMENT 20
Program the Travel 20
Test the Safety Reversal System 21
Test the Protector System™ 21
Test Cable Tension Monitor 22
Test Automatic Door Lock 22
To Open the Door Manually 22
OPERATION 23
Using Your Garage Door Opener 24
Connect with Your Smartphone 24
Timer to Close (TTC) 25
Using the Wall Control 26
PROGRAMMING 27
E975M Four Button Remote Control 27
Reprogramming myQ® Smart LED Garage Light 28
To Erase the Memory 28
MAINTENANCE 29
Care of Your Garage Door Opener 29
TROUBLESHOOTING 30
Diagnostic Chart 30
Additional Troubleshooting 31
REPAIR PARTS 32
Installation Parts 32
Garage Door Opener Assembly Parts 33
ACCESSORIES 33
WARRANTY 34-36

myQ® Serial Number

Write down the following information for future reference:

myQ® Serial Number:

Product S/N:

Date of Purchase:

/ /

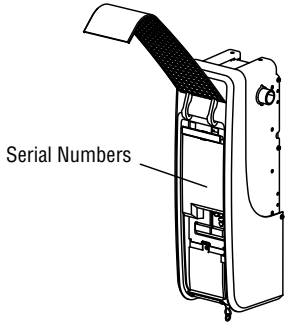

Unattended Operation

The Timer-to-Close (TTC) feature, the myQ® Smartphone Control app, and myQ® Garage Door are examples of unattended close and are to be used ONLY with sectional doors. Any device or feature that allows the door to close without being in the line of sight of the door is considered unattended close.

myQ Smart LED Garage Light must be installed to enable use of Timer To Close or myQ Smartphone Control of the door.

Introduction

Safety Symbol and Signal Word Review

This garage door opener has been designed and tested to offer safe service provided it is installed, operated, maintained and tested in strict accordance with the instructions and warnings contained in this manual.

When you see these Safety Symbols and Signal Words on the following pages, they will alert you to the possibility of ***serious injury or death*** if you do not comply with the warnings that accompany them. The hazard may come from something mechanical or from electric shock. Read the warnings carefully.

⚠ WARNING
Mechanical

⚠ WARNING
Electrical

When you see this Signal Word on the following pages, it will alert you to the possibility of damage to your garage door and/or the garage door opener if you do not comply with the cautionary statements that accompany it. Read them carefully.

⚠ CAUTION

Introduction

Planning

Survey your area to see if any of the conditions below apply to your installation. Depending on your requirements, additional materials may be required.

THIS DOOR OPENER IS COMPATIBLE WITH:

- Doors that use a torsion bar and springs. The torsion bar must be 2.5 cm diameter. NOT compatible with reverse wound drums.
- 8-12 cm drums good for 130 kg / 230 kg with installation of The Protector System™ (Safety IR Beams).
- Standard lift sectional doors up to 4.2 m high.
- Standard lift sectional door up to 5.5 m wide.
- Standard lift sectional door max area up to 16.5m^2.

NOTE: *Inspect the torsion bar while the door is raised and lowered. It is important that there is no noticeable movement up and down or left and right. If the movement is not corrected, the life of the garage door opener will be greatly reduced.*

Review or inspect proposed installation area. The door opener can be installed on the left or right side of door. Select the side that meets the requirements listed below.

a. Must have minimum of 6.5 cm between the wall and the center of the torsion bar.

b. Must have minimum of 7.5 cm between the ceiling and the center of torsion bar.

c. Must have minimum of 21.5 cm between the side wall (or obstruction) and the end of torsion bar.

d. The torsion bar must extend at least 3.8 cm past the bearing. This may vary depending on your installation requirements.

e. An electric outlet is required within 1.8 m of the installation area. If outlet does not exist, contact a qualified electrician.

f. Depending upon building construction, extension brackets or wood blocks may be needed to install the Protector System™ and cable tension monitor.

g. Alternate floor mounting of the safety reversing sensors will require hardware (not provided).

h. Check the seal on the bottom of the door. Any gap between the floor and the bottom of the door must not exceed 6 mm. Otherwise, the safety reversal system may not work properly.

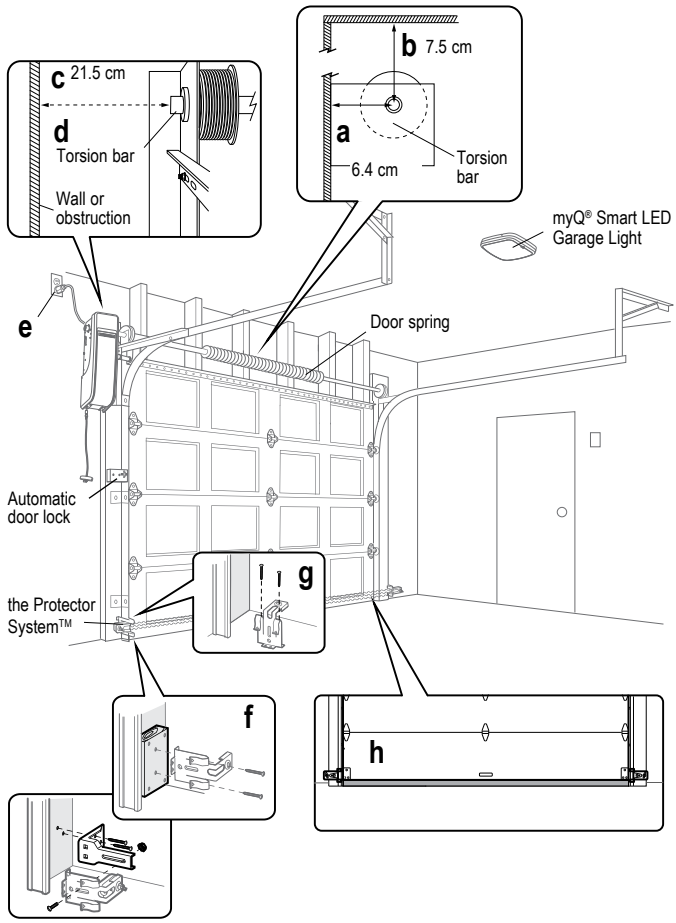

Introduction

Before You Connect with Your Smartphone

Monitor and control your garage door away from home using the myQ® app.

BEFORE YOU BEGIN:

You will need:

- Wi-Fi enabled smartphone, tablet or laptop
- Broadband Internet Connection
- Wi-Fi signal in the garage **(2.4 Ghz, 802.11b/g/n required)**
- Password for your home network (router's main account, not guest network)

TEST THE WI-FI SIGNAL STRENGTH

Make sure your mobile device is connected to your Wi-Fi network. Hold your mobile device in the place where your garage door opener will be installed and check the Wi-Fi signal strength.

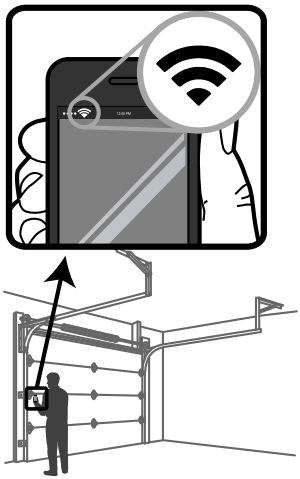

Check Signal Strength. If you see:

Wi-Fi signal is strong.
The garage door opener will connect to your Wi-Fi network.

Wi-Fi signal is weak.
The garage door opener may connect to your Wi-Fi network. If not, try one of the options below to improve the Wi-Fi signal:

No Wi-Fi signal.
The garage door opener will not be able to connect to your Wi-Fi network. Try one of the options below to improve the Wi-Fi signal:

- Move your router closer to the garage door opener to minimize interference from walls and other objects
- Buy a Wi-Fi range extender

See page 24 to connect the garage door opener to a mobile device.

Introduction

Preparing Your Garage Door

BEFORE YOU BEGIN:

- Disable locks.
- Remove any ropes connected to the garage door.

Complete the following test to make sure the garage door is balanced and is not sticking or binding:

1. Lift the door halfway up. Release the door. If balanced, it should stay in place, supported entirely by its springs.
2. Raise and lower the door to check for binding or sticking.

If your door binds, sticks, or is out of balance, call a trained door systems technician.

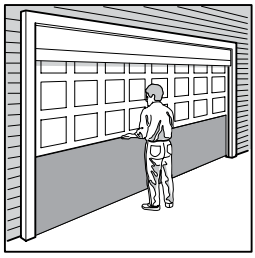

Sectional Door

⚠ WARNING

To prevent possible SERIOUS INJURY or DEATH:

- ALWAYS call a trained door systems technician if garage door binds, sticks, or is out of balance. An unbalanced garage door may NOT reverse when required.
- NEVER try to loosen, move or adjust garage door, door springs, cables, pulleys, brackets or their hardware, ALL of which are under EXTREME tension.
- Disable ALL locks and remove ALL ropes connected to garage door BEFORE installing and operating garage door opener to avoid entanglement.
- This opener system is equipped with an unattended operation feature. The door could move unexpectedly. NO ONE SHOULD CROSS THE PATH OF THE MOVING DOOR.

⚠ CAUTION

To prevent damage to garage door and opener:

- ALWAYS disable locks BEFORE installing and operating the opener.
- ONLY operate garage door opener at 230-240V mains to avoid malfunction and damage.

SPECIFICATIONS

Volts	230-240 Vac - 50 Hz, ONLY
Current	1.5 AMP
myQ Smart LED garage Light Current (independently powered)	0.2 AMPS
Power	150 Watts
R/T	4 minutes
Rated Load	10Nm
Max door height	up to 4.2 m (with max. door area 16.5m2)
Max door width	up to 5.5 m (with max. door area 16.5m2)
Max door area	16.5 m2
Max door weight (3 & 4 inch drum)	130 kg / 230 kg with installation of The Protector System™ (Safety IR Beams).
Max lift under spring tension	20 kg

Tools Needed

During assembly, installation and adjustment of the garage door opener, instructions will call for hand tools as illustrated below.

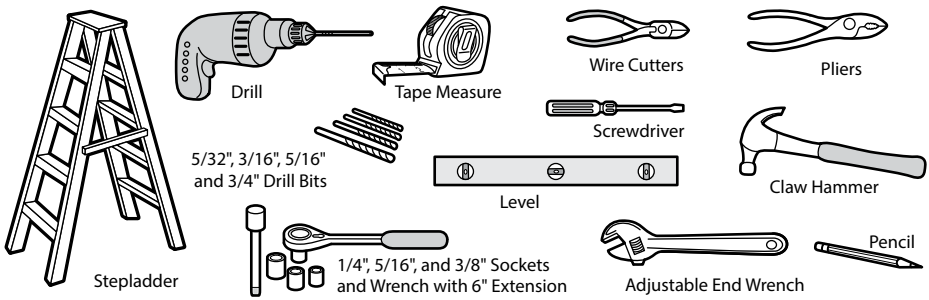

Introduction

Carton Inventory

If anything is missing, carefully check the packing material.

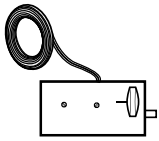

Automatic Garage Door Lock Model 841ANZ
with 2-Conductor White and White/Black
Bell Wire with Connector
NOTE: Older model 24V door locks
are incompatible

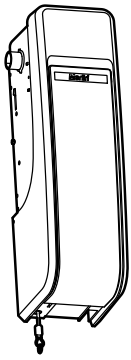

Garage Door Opener



2-Conductor Bell Wire
White and White/Red



Collar with
Set Screws

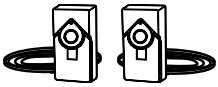

The Protector System®
(2) Safety Reversing Sensors
(1 Sending Sensor and
1 Receiving Sensor) with
2-Conductor White and
White/Black Bell Wire attached

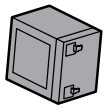

Battery



Mounting Bracket

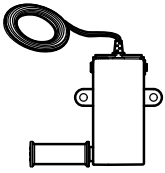

Cable Tension Monitor with
2-Conductor Green/White Bell Wires



Safety Labels
and Literature

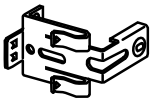

Safety Reversing Sensor Bracket (2)

Included Accessories



Smart Control Panel®
Model 880AUW

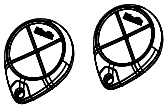

4-Button Remote
Control
Model E970M (2)
*Units may be supplied
with 2 X E960M remotes



MyQ® Smart LED Garage Light
Model 837AU
(Garage Door Opener Light)
with Hardware Bag

Hardware

Serrated Hex Screw M5 x 12 mm (2)
Hex Washer Screw 12G x 50 mm (4)
Hex Washer Screw 10G x 25mm (2)
Pan Head Screw 6G x 30mm (2)
Flush Head Screw 1/4" x 12mm (2)

Plasterboard Anchor 8 mm (Screw-In) (2)
Plasterboard Anchor 5 mm (2)
Staples x 30
Handle
Rope

MyQ® Smart LED Garage Light Hardware:
Plasterboard Anchor 8 mm (Screw-In) (2)
Pan Head Screw 6G x 25 mm (2)

Additional Items You May Need

Extension brackets (Model 041A5281-1) or wood blocks: Depending upon garage construction, extension brackets or wood blocks may be needed to install the safety reversing sensor.

Fastening hardware: Alternate floor mounting of the safety reversing sensor will require hardware not provided.

90˚ connector for cable conduit or flex cable adapter: Required for permanent wiring.

Assembly

1 Attach the Collar to the Garage Door Opener

⚠ WARNING

To prevent possible SERIOUS INJURY or DEATH, the collar MUST be properly tightened. The door may NOT reverse correctly or limits may be lost due to collar slip.

The garage door opener can be installed on either side of the door (see Planning section page 4). The illustrations shown are for installation on the left side.

1. Loosen the set screws.
2. Attach collar to the garage door opener motor shaft. The side of the collar with the larger hole should be placed on the motor shaft. Ensure that the collar is seated all the way on motor shaft until stop is reached.
3. Position the collar so the screws are facing out and are accessible when attached to the torsion bar.
4. Securely tighten the 2 square head set screws closest to the motor shaft by turning the screws 1/4 - 1/2 turn after making contact with the motor shaft.

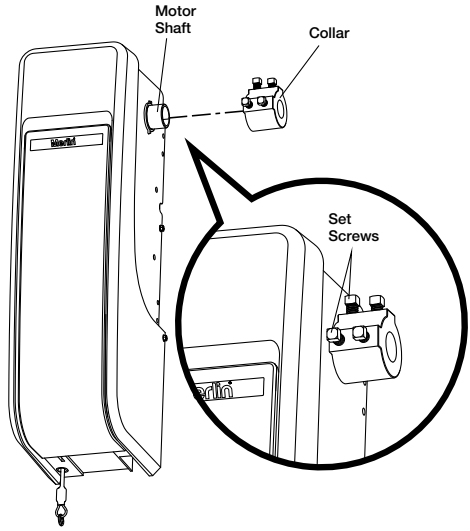

2 Attach Mounting Bracket to Garage Door Opener

HARDWARE

Screw
M5 x 12mm (2)

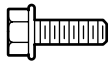

1. Loosely attach slotted side of mounting bracket to the same side of the garage door opener as the collar, using screws provided.

   NOTE: *Do not tighten screws until instructed.*

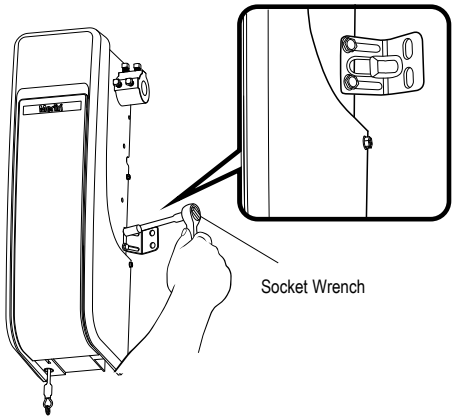

Wiring

CONTROL PANEL - *(located under front cover of the opener. Lift to access)*

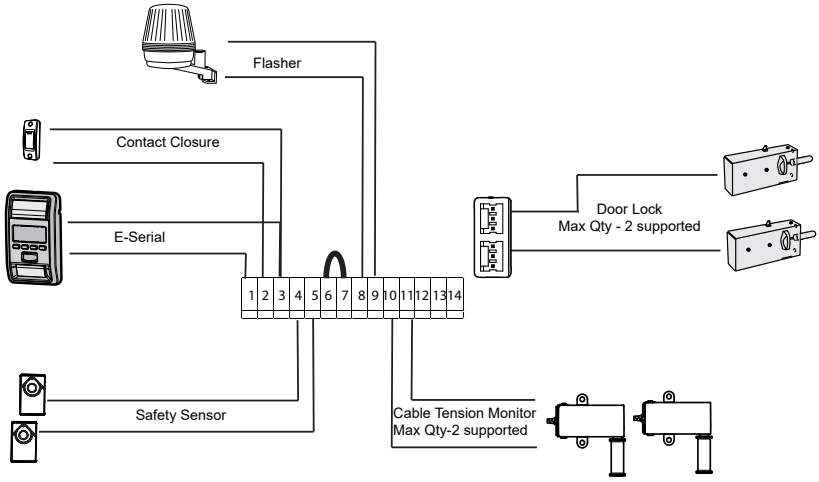

Pin#	Function	Color	Polarity	Comment
1	E-serial push button	Green	+	For Encrypted serial communication (Wall control)
2	Push Button	Red	+	Dry contact (contact closure)
3	Ground	White	-	Wall controls (dry contact and E serial)
4	Ground	White	-	IR sensors
5	IR-Sensor	Grey	+	IR sensors
6	Door-in-door	Green	+	For Door in Door dry contact sensor: (see note below)
7	Door-in-door	Green	-	Common terminal for Door in Door dry sensor (6 & 7 are normally linked)
8	Flasher	Black/Gray	+	Flashing Light output
9	Flasher & OCS Ground	White	-	Flashing Light ground
10	Cable tension monitor	Green	+	Connection for a cable tension monitor
11	Cable tension monitor	Green	-	Connection for a cable tension monitor
12	Not used	Green		Do not use this terminal
13	Not used	Green		Do not use this terminal
14	Not used	Green		Do not use this terminal

NOTE: Door in Door Connections 6 & 7 (used where built-in pedestrian doors are installed within a garage door).
Terminals 6 & 7 are normally linked. If the link is removed the opener will not operate.
Remove the link and install a Safety switch to prevent the opener from activating the garage door when the built-in pedestrian door is open.
Terminals are designed for operating with a dry contact.
Door safe condition = closed contacts
Door unsafe condition = open contacts.

Installation

1 Position and Mount the Garage Door Opener

NOTE: *For additional mounting options refer to the accessories on page 34.*

1. Close the garage door completely.
2. Slide the garage door opener onto the end of the torsion bar. If the torsion bar is too long or damaged, you may need to cut the torsion bar.

   Ensure the collar does NOT touch the bearing.
3. Use a level to position and vertically align the garage door opener. Verify the mounting bracket is located on a solid surface such as wood, concrete or door/flag bracket. If installing on plasterboard, the mounting bracket MUST be attached to a stud.
4. When the garage door opener is properly aligned, mark the mounting bracket holes. If necessary, tighten collar screws on the torsion bar to hold garage door opener in place while marking holes.

   NOTE: *The garage door opener does not have to be flush to wall.*
5. Remove the garage door opener from torsion bar. Drill 3/16 inch pilot holes at the marked locations. Drill through metal door rail plates if necessary.
6. Slide the garage door opener back onto the torsion bar until pilot holes align with bracket.
7. Tighten the 2 square head set screws (Shaft collar) on the torsion bar. For a hollow torsion bar, tighten screws 3/4 - 1 full turn after making contact with the bar. For a solid shaft torsion bar, tighten screws 1/4 - no more than 1/2 turn after making contact with the shaft. If installing on a keyed torsion bar, DO NOT tighten the screws into the keyway.
8. Secure the mounting bracket to the wall and to the garage door opener. Use the 14-10 x 2" screws to secure the mounting bracket to the wall. Tighten the screws holding the bracket to the opener

⚠ WARNING

To prevent possible SERIOUS INJURY or DEATH:

- Concrete anchors MUST be used if mounting bracket into masonry.
- NEVER try to loosen, move or adjust garage door, springs, cables, pulleys, brackets or their hardware, ALL of which are under EXTREME tension.
- ALWAYS call a trained door systems technician if garage door binds, sticks or is out of balance. An unbalanced garage door might NOT reverse when required.
- Garage door opener MUST be mounted at a right angle to the torsion bar to avoid premature wear on the collar.

HARDWARE

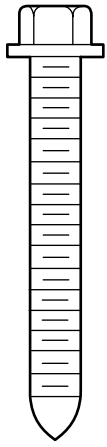

Screw
12G x 50mm (2)

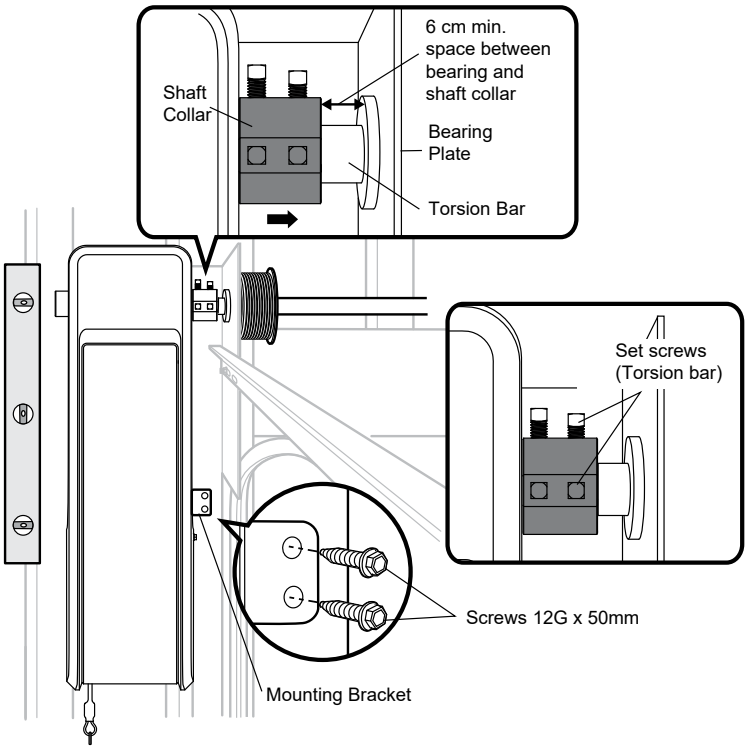

Installation

2 Attach the Emergency Release Rope and Handle

1. Insert one end of the emergency release rope through the handle. Make sure that "NOTICE" is right side up. Secure with an overhand knot at least 2.5 cm from the end of the rope to prevent slipping.
2. Insert the other end of the emergency release rope through the hole in the steel emergency release cable. Mount the emergency release within reach, but at least 1.8 m above floor to prevent accidental release and secure with an overhand knot.

NOTE: *If it is necessary to cut the rope, heat seal the cut end with a match or lighter to prevent unraveling.*

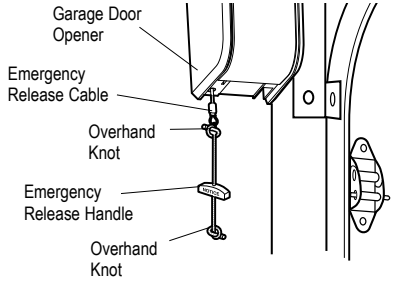

⚠ WARNING

To prevent possible SERIOUS INJURY or DEATH from a falling garage door:

- If possible, use emergency release handle to disengage door ONLY when garage door is CLOSED. Weak or broken springs or unbalanced door could result in an open door falling rapidly and/or unexpectedly.
- NEVER use emergency release handle unless garage doorway is clear of persons and obstructions.

HARDWARE

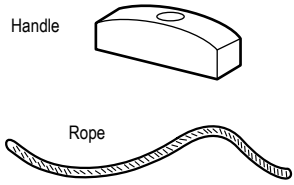

3 Install the Automatic Door Lock

The automatic garage door lock (model 841ANZ) is used to prevent the door from being manually opened once the door is fully closed, see Accessories page 34

NOTE: *Older model 24 V door locks are incompatible.*

1. The lock must be mounted within 3 m of door opener If possible, mount on same side as door opener. The third roller from the bottom is ideal for most installations.
2. Ensure rail surface is clean and attach the lock template to the track so that the bolt hole is approximately 7.5 cm from the center of a door roller.
3. Drill holes as marked on the template.
4. Fasten automatic door lock to the outside of the door track with hardware provided.
5. Run bell wire up wall to door opener. Use insulated staples to secure wire in several places. Insert wire through the bottom of the door opener.
6. Plug the connector into either plug in the door opener.

A secondary door lock can be installed on the opposite side of the door following the instructions above.

HARDWARE

Flush Head Screw 1/4" x 12mm (2)

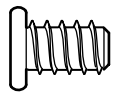

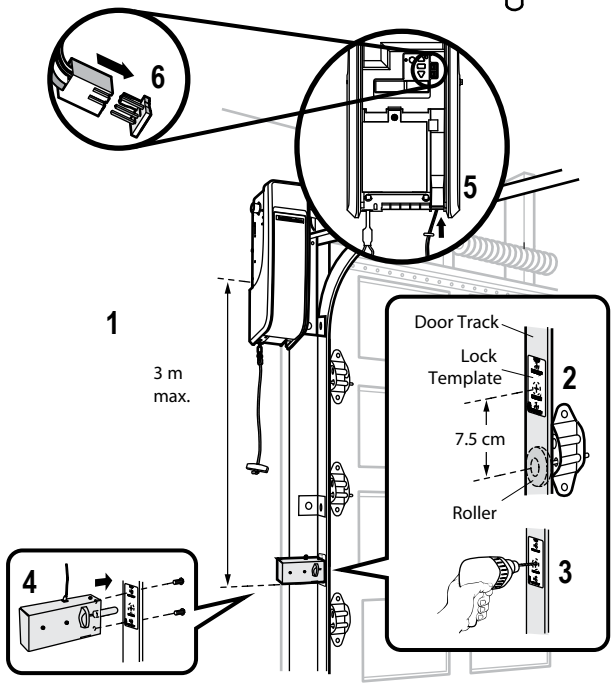

Installation

4 Attach the Cable Tension Monitor (Required)

NOTE: *The cable tension monitor is shipped for left side installation. It is recommended that the cable tension monitor be installed on the same side of the door as the door opener. For right side installation, remove the snap-ring holding the roller in place and reassemble it on the opposite side of the cable tension monitor.*

1. Make sure the door cable is approximately 19 mm from the mounting surface. Door adjustments or shimming may be required to achieve proper depth for the door cable.
2. Position the cable tension monitor so the roller is 50 - 150 mm from the drum and the roller extends 3 - 6 mm past the cable. Make sure cable tension monitor is located over a wood support member and the roller is free from any obstructions.
   NOTE: *There must be no obstructions in the installation area that prevent the cable tension monitor from closing completely when slack is detected.*
3. Mark and drill 3/16" pilot holes for screws (pilot holes are not required for anchors).
4. Attach the cable tension monitor to the wall using the hardware provided. Make sure that the roller is on top of the cable.
5. Run bell wire to door opener. Use insulated staples to secure wire.
6. Connect bell wire to the green quick-connect terminals (10/11) on the door opener (polarity is not important).
   NOTE: *Cable must have tension through entire door travel. Make sure there is no slack in cable on opposite side of door during normal operation. If slack occurs during door travel, adjust cables as required.*

A second cable tension monitor may be installed for additional safety. When two cable tension monitors are installed, the door will not move in the down direction or will reverse if one of the monitors detects slack or is disconnected.

If one of the cable tension monitors is removed, unplug both monitors from the opener. Then plug in the monitor you wish to use and unplug and plug in the opener three times to relearn the monitor to the opener.

The cable tension monitor MUST be connected and properly installed before the garage door opener will move in the down direction.

The cable tension monitor detects ANY slack that may occur in the cables and will reverse the door, eliminating service calls.

HARDWARE

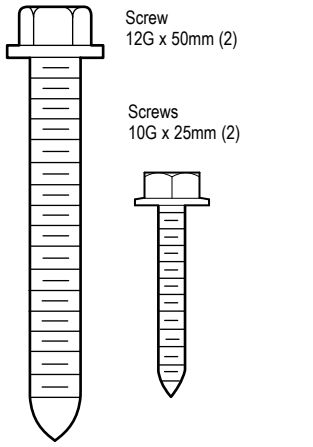

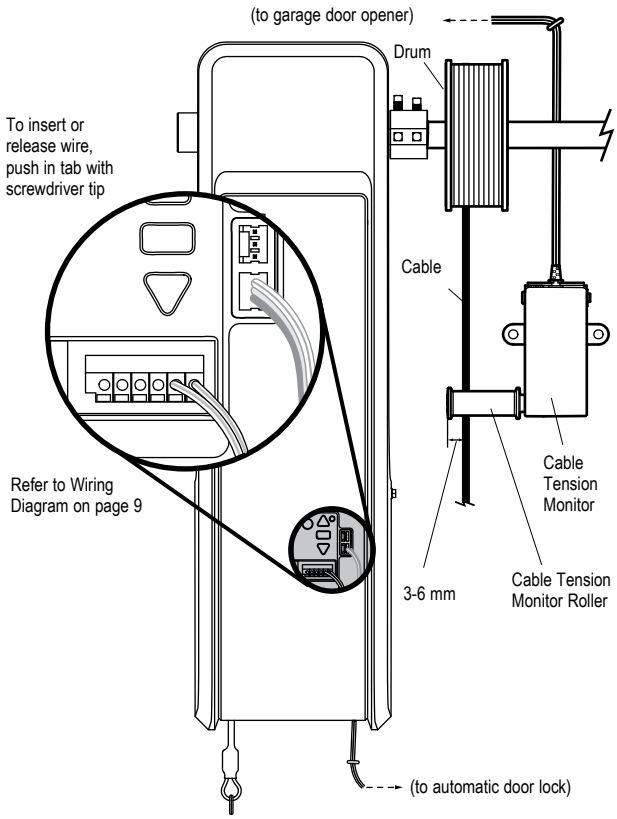

SIDE VIEW

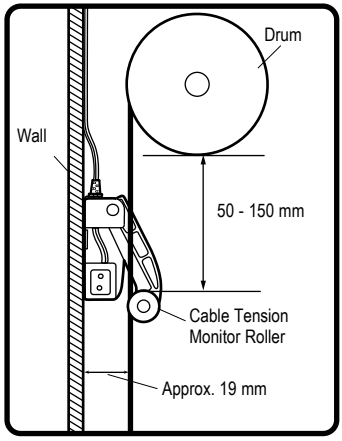

5 Install the Wall Control (Smart Control Panel)

Install wall control within sight of garage door, out of reach of small children at a minimum height of 1.5 m above floors, landings, steps or any other adjacent walking surface, and away from ALL moving parts of door.

NOTE: Do not install the Wall Control in a position where it can be activated from outside the garage.

Your garage door opener is compatible with up to 2 Smart Control Panels or 4 of any other Security+ 2.0® door controls.

NOTE: *Older Merlin door controls and third party products are not compatible.*

For wall box installations it is not necessary to drill holes or install the plasterboard anchors. Use the existing holes in the wall box.

1. Strip 10 mm of insulation from one end of the wire and separate the wires.
2. Connect the white wire to the screw labelled W and the white wire with the red stripe to the screw labelled R.
3. Mark the location of the bottom mounting hole and drill a 4 mm hole.
4. Install the bottom screw, allowing 3 mm to protrude from the wall.
5. Position the bottom hole of the wall control over the screw and slide down into place.
6. Lift the push Door Activation bar up and mark the top hole.
7. Remove the wall control from the wall and drill a 4 mm hole for the top screw.
8. Position the bottom hole of the wall control over the screw and slide down into place. Attach the top screw.
9. Run the white and red/white wire from the wall control to the garage door opener. Attach the wire to the wall and ceiling with the staples (not applicable for wall box or pre-wired installations). Do not pierce the wire with the staple as this may cause a short or an open circuit.
10. Connect the white wire to the white terminal 3.Connect the white with red stripe wire to the green terminal 1.
11. Fasten the warning placard to the wall next to the wall control.

NOTE: *DO NOT connect the power and operate the garage door opener at this time. The door will travel to the full open position but will not return to the close position until the safety reversing sensors are connected and properly aligned. See page 15.*

⚠ WARNING

To prevent possible SERIOUS INJURY or DEATH from electrocution:

- Be sure power is NOT connected BEFORE installing wall control.
- Connect ONLY to 7-28 VOLT low voltage wires.

To prevent possible SERIOUS INJURY or DEATH from a closing garage door:

- Install wall control within sight of garage door, out of reach of small children at a minimum height of 1.5 m above floors, landings, steps or any other adjacent walking surface, and away from ALL moving parts of door.
- NEVER permit children to operate or play with wall control push buttons or remote control transmitters.
- Activate door ONLY when it can be seen clearly, is properly adjusted, and there are no obstructions to door travel.
- ALWAYS keep garage door in sight until completely closed. NEVER permit anyone to cross path of closing garage door.

HARDWARE



Screw 6G x 30mm (Standard installation) (2)

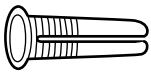

Plasterboard Anchors (2)

Insulated Staples (Not shown)

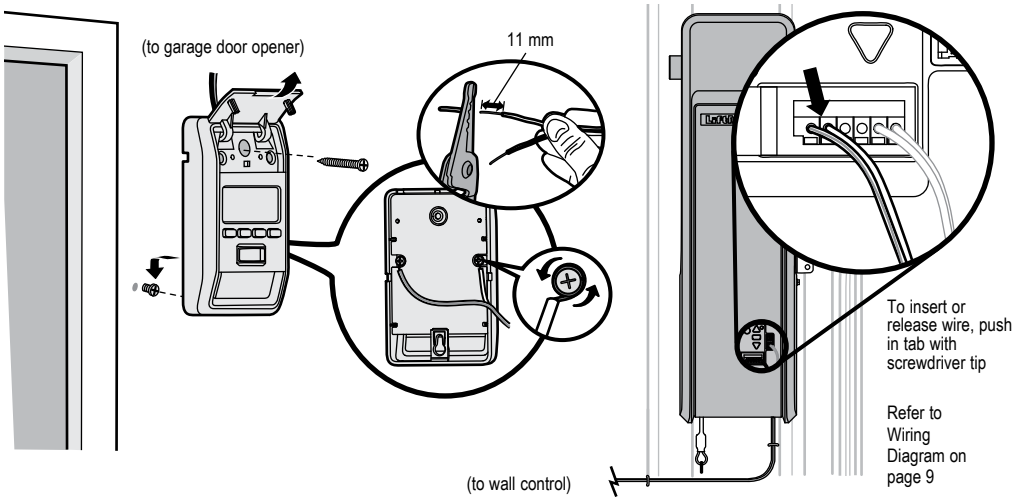

IMPORTANT INSTALLATION INSTRUCTIONS

⚠ WARNING

To reduce the risk of SEVERE INJURY or DEATH:

- DO NOT alter the plug.
- myQ Smart LED Garage Light is intended for ceiling or wall mount and indoor applications ONLY.

6 Install myQ Smart LED Garage Light

The myQ Smart LED Garage Light is designed to plug directly into a standard GPO (general purpose outlet). Select an appropriate location on the ceiling or wall to mount the light within 1.8 m of an electrical outlet so that the cord and light are away from moving parts.

NOTE: *If installing light on plasterboard and a ceiling joist cannot be located, use plasterboard anchors provided. No pilot hole is required for plasterboard anchors.*

1. Drill pilot holes 11cm* apart if mounting to joist.

   OR

   Screw in plasterboard anchors 11cm* apart if mounting to plasterboard.
2. Determine the length of power cord needed to reach the nearest outlet. Wind any excess cord around cord retainer on the top side of the light base. Route the cord through the channel so the light mounts flush.
3. Open the light lens.
4. Mount the light with the screws provided.
5. Close the light lens.
6. Plug in the light to the outlet.

   NOTE: *The LED light is very bright. DO NOT stare at the light while on a ladder.*

Your myQ Smart LED Garage Light has already been programmed at the factory to operate with your opener. Any additional or replacement remote lights will need to be programmed.

* NOTE - 837AU - 11cm | 827AU - 15.5cm

HARDWARE

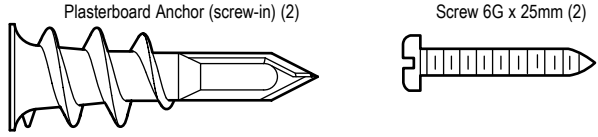

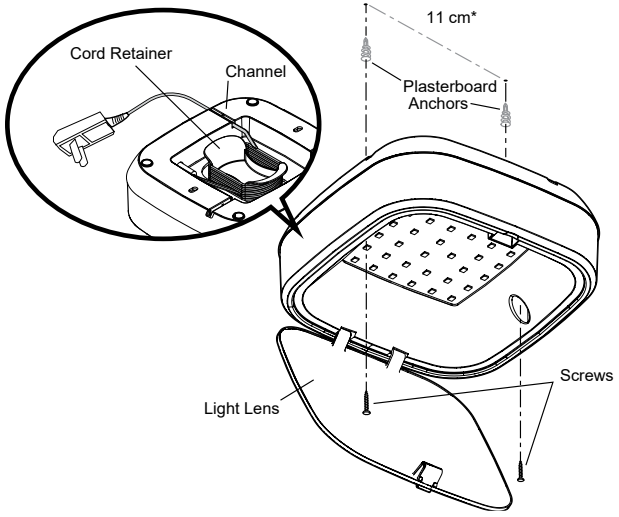

Installation

7 Install the Protector System™

The Protector System™ must be connected and aligned correctly before the garage door will move in the down direction. This is a required safety device and cannot be disabled.

NOTE: Merlin recommends to install the safety reversing sensors on each installation. For use of myQ or Timer To Close features the installation of the Protector System™ is required.

IMPORTANT INFORMATION ABOUT THE SAFETY REVERSING SENSOR

When properly connected and aligned, the Protector System™ will detect an obstacle in the path of its electronic beam. The sending sensor transmits an invisible light beam to the receiving sensor. If an obstruction breaks the light beam while the door is closing, the door will stop and reverse to full open position, and the myQ Smart LED Garage Light will flash 10 times.

The sensors must be installed inside the garage so that the sending and receiving sensors face each other across the door, no more than 10 cm above the floor. Either can be installed on the left or right of the door as long as the sun never shines directly into the receiving sensor lens.

If it is necessary to mount the sensors on the wall, the brackets must be securely fastened to a solid surface such as the wall framing. Extension brackets (see accessories) are available if needed. If installing in masonry construction, add a piece of wood at each location to avoid drilling extra holes in masonry if repositioning is necessary.

The invisible light beam path must be unobstructed. No part of the garage door (door tracks, springs, hinges, rollers or other hardware) may interrupt the beam while the door is closing.

⚠ WARNING

Be sure power is NOT connected to the garage door opener BEFORE installing the Protector System™.

To prevent SERIOUS INJURY or DEATH from a closing garage door:

- Correctly connect and align tthe Protector System™. This required safety device MUST NOT be disabled.
- The Protector System™ must be installed no higher than 10cm above the garage floor.

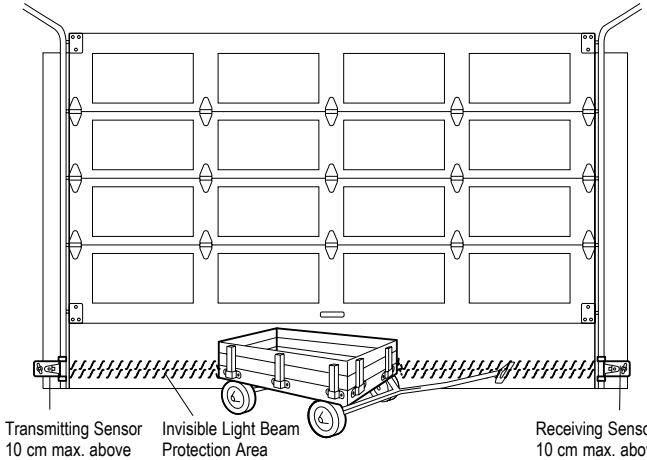

Facing the door from inside the garage.

Installation

INSTALLING THE BRACKETS

Be sure power to the opener is disconnected. Install and align the brackets so the Protector Sytem™ will face each other across the garage door, with the beam no higher than 10 cm above the floor. Choose one of the following installations.

NOTE: This accessory must be used for all myQ installations and all other installations where the closing force as measured on the bottom of the door is over 400 N (40 kgf).

SPECIAL NOTE: Merlin strongly recommends that The Protector System™ be installed on all garage door openers.

SAFETY BEAMS: By installing Safety Beams, an open door is prevented from closing if a person or object is located in the beam area. If the door is already closing, it will return to the open position. A closed door is not prevented from opening.

⚠ WARNING

To prevent entrapment, install Safety Beams no higher than 100 mm above the floor.

Disconnect power to the garage door opener before installing Safety Beams.

If the Protector System™ is installed and needs to be removed, the opener will need to be reprogrammed .

Assembly Process:

The senosrs are supplied preassembled, complete with two sensors, wiring and wall brackets.

Install the mounting brackets and sensors to either side of the inside of the garage door, and at a height of no greater than 100 mm off the garage floor.

The brackets are designed to be used for Wall or Floor fixing, with a variety of hole combinations to achieve the desired results (fig 1).

fig.1

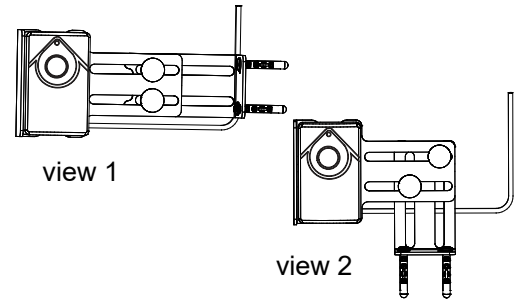

Drill the required holes and install the brackets with wall plugs and screws provided. Ensure they do not obstruct the door movement.

Align the sensors to face each other and tighten if necessary. The wiring should exit from the bottom of the housing to maintain the correct IP rating and continued operation.

One sensor is a Sending Eye , the other is a Receiving Eye. Try to avoid positioning these in direct sunlight as this may interfere with the operation of the beams.

Install Cabling:

Run both sets of sensor cables up the door tracks, across the door header and back to the Power Head (see fig 2 & 3).

Clean the contact area with alcohol wipes (provided) and secure the self-adhesive Cable Mounts to the rails. Attach the cable with cable ties.

Ensure the cable is well supported and does not interfere or get damaged by movement of the door panels or spring hardware.

fig.2

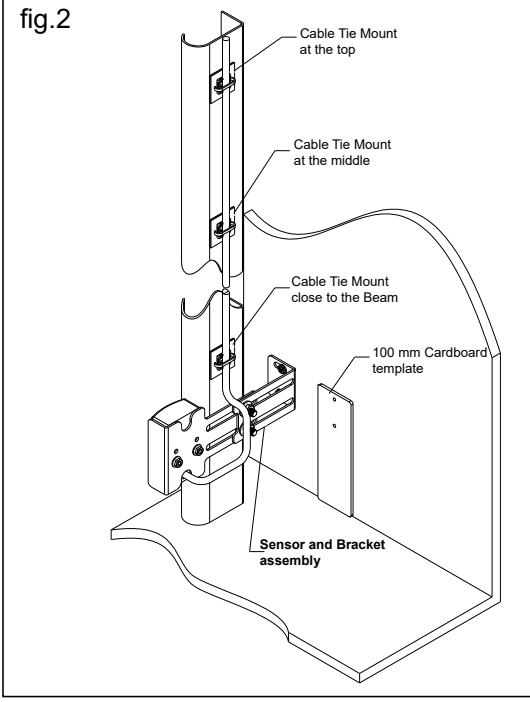

Installation

INSTALL THE PROTECTOR SYSTEM™ (CONTINUED)

Connect cable to the Opener:

Disconnect the mains Power from the Opener.

At the Opener Control Panel located under the front cover of the opener. Lift to access the “External Accessory Terminal Block”.

Twist both WHITE wires together and both GREY wires together.

Connect the white wire to the white terminal 4.

Connect the grey wire to the grey terminal 5.

See wiring diagram on page 9.

Loop and secure the excess cabling behind the opener assembly.

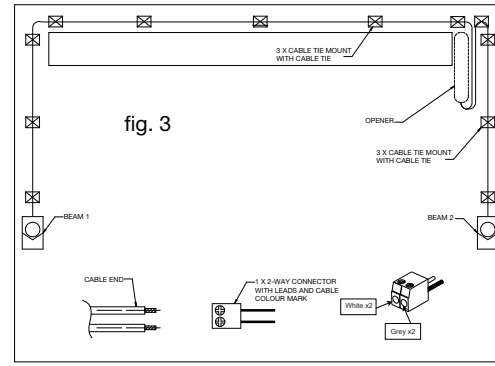

fig. 3

Status indicators on the Safety Beams:

RED LED ON - Normal Operation

RED LED Flashing - Protector System misaligned or obstructed

For further diagnostics refer to the TROUBLESHOOTING section on page 30.

Emergency Overide:

NOTE: The door can't be closed using the myQ app if an obstruction of Safety Beam failure has occurred.

However, if needed, the door can be closed by using the programmed button of a Smart Control Panel (880AUW), Keyless Entry Keypad (E840M) or the Control button located on the bottom of the opener.

Follow the process below:

With the door open Press the programmed button once and release.

Press and “HOLD” the button again, and continue to HOLD until the door has completely closed.

NOTE: If the button is released at any point during the downward movement, the door will stop and return to the OPEN position. In this case repeat the previous process again. The “DOOR CLOSE” process will need to be performed each time the door needs to be CLOSED, until the obstruction is removed or repairs are made to the Protector System™.

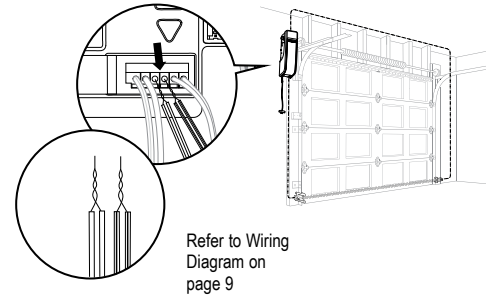

Refer to Wiring Diagram on page 9

8 Connect Power

To avoid installation difficulties, do not run the garage door opener at this time.

To reduce the risk of electric shock, your garage door opener has a grounding type plug with a third grounding pin. This plug will only fit into a grounding type outlet. If the plug doesn't fit into the outlet you have, contact a qualified electrician to install the proper outlet.

⚠ WARNING

To prevent possible SERIOUS INJURY or DEATH from electrocution or fire:

- Garage door installation and wiring MUST be in compliance with ALL local electrical and building codes.
- NEVER use an extension cord, 2-wire adapter or change plug in ANY way to make it fit outlet. Be sure the opener is grounded.

CONNECT POWER

1. Plug in the garage door opener into a grounded outlet.
2. DO NOT run garage door opener at this time.

Installation

9 Install the Battery Backup

When in Battery Backup mode, myQ® Smartphone Control and wireless myQ devices will be disabled. In battery backup mode, the automatic garage door lock will unlock when the garage door is opened, and will remain disabled until power is restored.

1. Unplug the garage door opener.
2. Use a Phillips head screwdriver to remove the battery cover on the garage door opener.
3. Partially insert the battery into the battery compartment with the terminals facing out.
4. Connect red (+) and black (-) wires from the garage door opener to the corresponding terminals on the battery.
5. Replace the battery cover.
6. Plug in the garage door opener.

BATTERY STATUS LED

GREEN LED:

All systems are normal.

- A solid green LED light indicates the battery is fully charged.
- A flashing green LED indicates the battery is being charged.

ORANGE LED:

The garage door opener has lost power and is in battery backup mode.

- A solid orange LED with beep, sounding approximately every 2 seconds, indicates the garage door opener is operating on battery power.
- A flashing orange LED with beep, sounding every 30 seconds, indicates the battery is low.

RED LED:

The garage door opener's 12V battery needs to be replaced.

- A solid red LED with beep, sounding every 30 seconds, indicates the 12V battery will no longer hold a charge and needs to be replaced. Replace the battery back up to maintain the battery backup feature.

NOTE: *Battery does not have to be fully charged to operate the garage door opener.*

⚠ WARNING

To reduce the risk of FIRE or INJURY to persons:

- Disconnect ALL electric and battery power BEFORE performing ANY service or maintenance.
- Use ONLY Merlin part #041A6357-2 for replacement battery.
- DO NOT dispose of battery in fire. Battery may explode. Check with local codes for disposal instructions.

⚠ CAUTION

ALWAYS wear protective gloves and eye protection when changing the battery or working around the battery compartment.

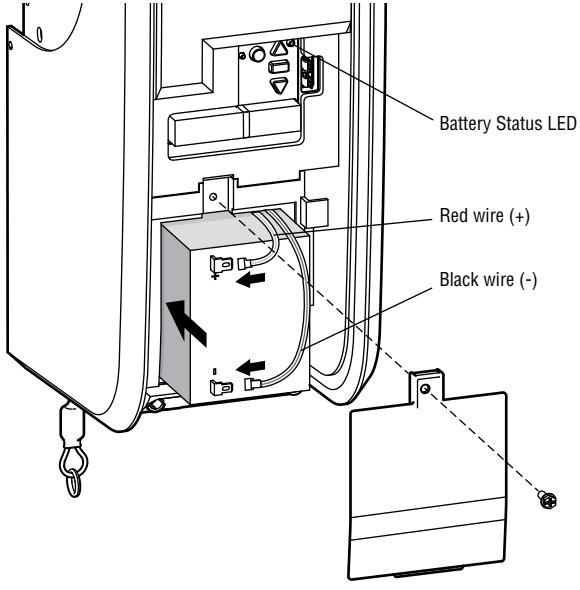

Adjustment

1 Program the Travel

Travel limits regulate the points at which the door will stop when moving up or down.

While programming, the UP and DOWN buttons can be used to move the door as needed.

1. Press and hold the Adjustment Button until the UP Button begins to flash and/or a beep is heard.
2. Press and hold the UP Button until the door is in the desired UP position.
3. Once the door is in the desired UP position press and release the Adjustment Button. The garage door opener lights will beep and the DOWN Button will begin to flash.
4. Press and hold the DOWN Button until the door is in the desired DOWN position.
5. Once the door is in the desired DOWN position press and release the Adjustment Button. The garage door opener lights will beep and the UP Button will begin to flash.
6. Press and release the UP Button. When the door travels to the programmed UP position, the DOWN Button will begin to flash.
7. Press and release the DOWN Button. The door will travel to the programmed DOWN position. Programming is complete.

If the garage door opener lights are flashing 5 times during the steps for Program the Travel, the programming has timed out. If the cable tension monitor is not installed or is sensing too much slack in the cable, the garage door opener light will flash 5 times. Ensure the cable tension monitor is correctly installed then follow the steps for Program the Travel. If the garage door opener lights are flashing 10 times during the steps for Program the Travel, the Protector System™ is misaligned or obstructed (refer to page 15). When the sensors are aligned and unobstructed, cycle the door through a complete up and down cycle using the remote control or the UP and DOWN buttons. Programming is complete. If you are unable to operate the door up and down, repeat the steps for Programming the Travel.

⚠ WARNING

Without a properly installed safety reversal system, persons (particularly small children) could be SERIOUSLY INJURED or KILLED by a closing garage door.

- Incorrect adjustment of garage door travel limits will interfere with proper operation of safety reversal system.
- After ANY adjustments are made, the safety reversal system MUST be tested. Door MUST reverse on contact with 40 mm high object on the floor.

⚠ CAUTION

To prevent damage to vehicles, be sure fully open door provides adequate clearance.

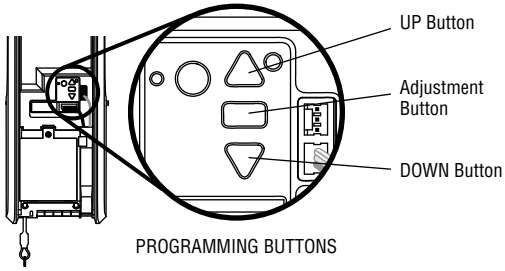

PROGRAMMING BUTTONS

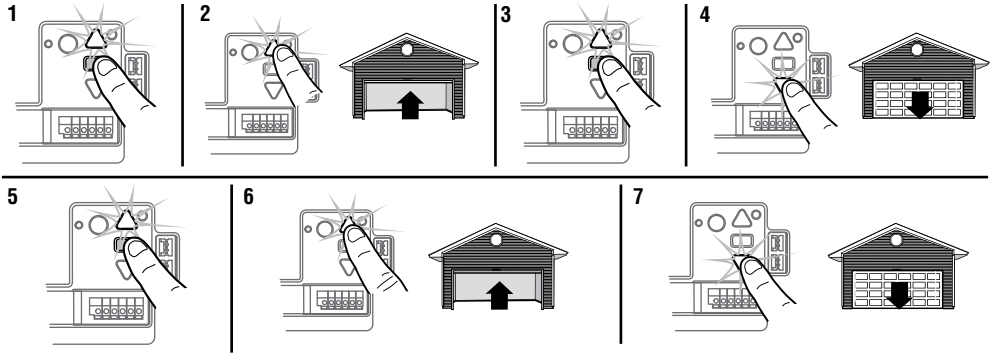

Adjustment

2 Test the Safety Reversal System

TEST

1. With the door fully open, place a 40 mm board on the floor, centered under the garage door.
2. Press the remote control push button to close the door. The door MUST reverse when it makes contact with the board.

ADJUST

If the door stops but does not reverse:

1. Review the installation instructions provided to insure all steps were followed;
2. Repeat Program the Travel (see Adjustment Step 1);
3. Repeat the Safety Reversal test.

If the test continues to fail, call a trained door systems technician.

IMPORTANT SAFETY CHECK:

Test the Safety Reverse System after:

- Each adjustment of limits.
- Any repair to or adjustment of the door (including springs and hardware).
- Any repair to or buckling of the floor.
- Any repair to or adjustment of the garage door opener.

⚠ WARNING

Without a properly installed safety reversal system, persons (particularly small children) could be SERIOUSLY INJURED or KILLED by a closing garage door.

- Safety reversal system MUST be tested every month.
- After ANY adjustments are made, the safety reversal system MUST be tested. Door MUST reverse on contact with 40 mm high object on the floor.

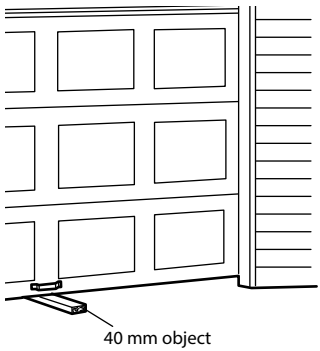

3 Test the Protector System™

1. Open the door. Place an obstruction in the path of the Protector System beam.
2. Press the remote control push button to close the door. The door will not move and myQ Smart LED Garage Light will flash 10 times.
3. Remove the obstruction.
4. Press the remote control push button to close the door.
5. Obstruct the Protector System beam while the door is closing. The door will stop and return to the fully open position. The myQ Smart LED Garage Light will flash 10 times.
6. Press the remote control push button to close the door.
7. With the door now closed, press the remote control push button to open the door.
8. Obstruct the Protector System beam while the door is opening. The door will continue to the fully open position.

The garage door opener will not close from a remote control if the LED in either safety reversing sensor is off or flashing (alerting you to the fact that the sensor is damaged, disconnected, misaligned or obstructed).

If the garage door opener closes the door when the safety reversing sensor is obstructed, call for a trained door systems technician.

⚠ WARNING

Without a properly installed safety reversing sensor, persons (particularly small children) could be SERIOUSLY INJURED or KILLED by a closing garage door.

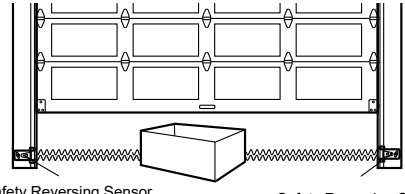

Adjustment

4 Test Cable Tension Monitor

1. With the door fully closed, push on the front of the cable tension monitor. A click should be heard. If there is no click, the roller may be hitting the jamb and not allowing the switch to detect slack in the cable. Make sure the cable tension monitor is mounted flush with the wall and the roller is free from any obstructions.

If your cable tension monitor has been activated the UP and DOWN arrows will flash diagnostic code 3-5, see page 30.

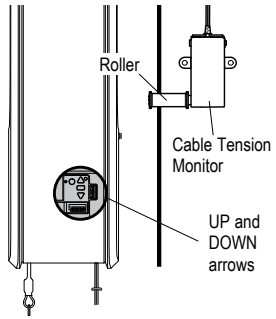

5 Test Automatic Door Lock

1. With the door fully closed, the automatic door lock bolt should be protruding through the track.
2. Operate the door in the open direction. The automatic door lock should retract before the door begins to move.
3. Operate the door in the down direction. When the door reaches the fully closed position, the automatic door lock should move into lock position to secure the door.

   NOTE: *If the automatic door lock does not function, the lock can be manually released by sliding the manual release handle to the open position.*

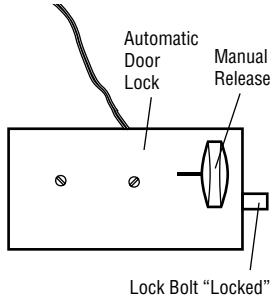

6 To Open the Door Manually

Manually release the Automatic Door Lock by sliding the manual release handle to the open position ensuring the lock bolt is fully retracted. The door should be fully closed if possible. Pull down on the emergency release handle until a click noise is heard from the door opener and lift the door manually.

To reconnect the door to the door opener, pull the emergency release handle straight down a second time until a click noise is heard from the door opener. The door will reconnect on the next UP or DOWN operation.

TEST THE EMERGENCY RELEASE:

1. Make sure the door is closed.
2. Manually release the Automatic Door Lock by sliding the manual release handle to the open position.
3. Pull the emergency release handle. The door should then be able to be opened manually.
4. Return the door to the closed position.
5. Pull the emergency handle a second time.
6. Activate the opener to engage the opener drive mechanism.

⚠ WARNING

To prevent possible SERIOUS INJURY or DEATH from a falling garage door:

- If possible, use emergency release handle to disengage door ONLY when garage door is CLOSED. Weak or broken springs or unbalanced door could result in an open door falling rapidly and/or unexpectedly.
- NEVER use emergency release handle unless garage doorway is clear of persons and obstructions.

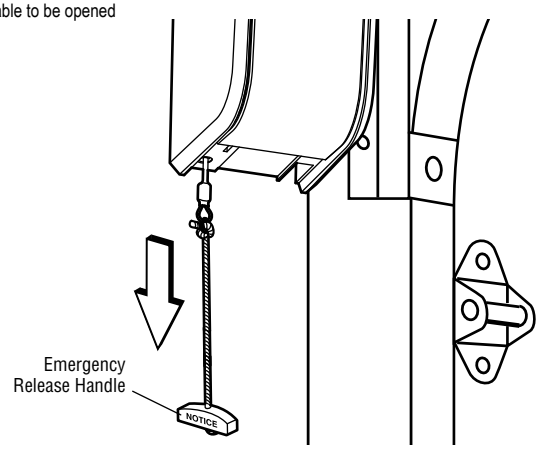

Operation

Using Your Garage Door Opener

FEATURES

Your garage door opener is equipped with features to provide you with greater control over your garage door operation.

Alert2Close

The Alert2Close feature provides a visual alert that an unattended door is closing. (Requires the installation of the myQ Smart LED Garage Light

TIMER-TO-CLOSE (TTC)

The TTC feature automatically closes the door after a specified time period that can be adjusted using a TTC enabled Smart Control Panel (880AUW). Prior to and during the door closing the myQ Smart LED Garage Light will flash.

myQ®

myQ allows you to control your garage door opener from your mobile device from away from home. myQ technology uses a 900Mhz signal to provide two way communication between the garage door opener and myQ enabled accessories. The garage door opener has an internal gateway that allows the garage door opener to communicate directly with a home Wi-Fi network and access your myQ account.

THE PROTECTOR SYSTEM™ (SAFETY REVERSING SENSORS)

When properly connected and aligned, the Protector System will detect an obstruction in the path of the infrared beam. If an obstruction breaks the infrared beam while the door is closing, the door will stop and reverse to full open position, and the myq Smart LED Garage Light will flash 10 times. If the door is fully open, and the Protector System is not installed, or is misaligned, the door will not close from a remote control. However, you can close the door if you hold the button on the wall control or keyless entry until the door is fully closed. The Protector System does not affect the opening cycle. For more information see page 21.

ENERGY CONSERVATION

For energy efficiency the garage door opener will enter sleep mode when the door is fully closed. The sleep mode shuts the garage door opener down until activated. The sleep mode is sequenced with the myQ Smart LED garage light and based on the duration programmed by the Wall Controller; as the light turns off the Protector System will turn off. Whenever the garage door opener activates the myQ Smart LED Garage Light, the sensor LEDs will light. The garage door opener will not go into the sleep mode until the garage door opener has completed 5 cycles upon power up.

MEMORY CAPACITY

SECURITY+ 2.0® ACCESSORIES	MEMORY CAPACITY
Remote Controls	Up to 40
Door Controls	Up to 2 Smart Control Panels or 4 of any other Security+ 2.0® door controls
Keyless Entries	Up to 4
myQ Accessories	Up to 16

LIGHTS

The myQ Smart LED Garage light will turn on when the opener is initially plugged in; power is restored after interruption, or when the garage door opener is activated. The light will turn off automatically after 4-1/2 minutes (default setting 4.5 minutes, adjustable using the Wall Control: 1.5, 2.5, 3.5 or 4.5 minutes).

LIGHT FEATURE

The garage door opener is equipped with an added feature; the lights will turn on when someone enters through the open garage door and the safety reversing sensor infrared beam is broken. For added control over the light on your garage door opener, see page 26.

USING YOUR GARAGE DOOR OPENER

The garage door opener can be activated through a wall-mounted door control, remote control, wireless keyless entry or myQ® accessory. When the door is closed and the garage door opener is activated the door will open. If the door senses an obstruction or is interrupted while opening the door will stop. When the door is in any position other than closed and the garage door opener is activated the door will close. If the garage door opener senses an obstruction while closing, the door will reverse. If the obstruction interrupts the sensor beam the garage door opener lights will blink 10 times. However, you can close the door if you hold the button on the wall control or keyless entry until the door is fully closed. The safety reversing sensors do not affect the opening cycle. The safety reversing sensor must be connected and aligned correctly before the garage door opener will move in the down direction.

BATTERY BACKUP

The battery backup system allows access in and out of your garage, even when the power is out. When the garage door opener is operating on battery power, the garage door opener will run slower, the light will not function, the Battery Status LED will glow solid orange, and a beep will sound approximately every 2 seconds.

Operation

Connect With Your Smartphone

The Wi-Fi® Garage Door Opener is compatible with up to 16 myQ enabled accessories. Up to 10 devices can be paired to the Wi-Fi garage door opener's internal gateway. These devices can be controlled with the myQ app. These devices include any combination of myQ garage door openers, Wi-Fi garage door openers, myQ light controls. A Merlin myQ Gateway (828AU) can be added if you need to control more than 10 devices using the myQ app. Up to 6 devices can be paired to garage door opener itself (controlled by garage door opener through 900MHz). These devices include any combination of myQ light controls or a garage door opener.

You will need:

- Wi-Fi enabled smartphone app.
- Broadband Internet Connection
- Wi-Fi signal in the garage **(2.4 Ghz, 802.11b/g/n required)**, see page 5
- Password for your home network (router's main account, not guest network)
- myQ® serial number located on the garage door opener

SYNCHRONISE THE WALL CONTROL

To synchronise the wall control to the garage door opener, press the push bar until the garage door opener activates (it may take up to 3 presses).The garage door opener must run through a complete cycle before it will activate Wi-Fi programming.

CONNECT YOUR GARAGE DOOR OPENER TO YOUR HOME WI-FI NETWORK

1. Ensure your smartphone is connected to the Wi-Fi internet connection on the 2.4Ghz frequency.

2. Download the myQ app on your smartphone from the App Store® or Google Play™ store.

Sign up to create a myQ account or sign in using an existing account.

3. Ensure you are in the "Devices" screen within the app and then press the plus symbol to add a device and move into the "Device Setup" screen.

4. There shall be a list of different devices to select from, select "Garage Door Opener with Wi-Fi Wall Installed". There should also be images of the different devices to select from and the "Garage Door Opener with Wi-Fi Wall Installed" should have the image of the Commander Ultimate opener.

5. Once you have selected "Garage Door Opener with Wi-Fi Wall Installed", it should take you to the next screen highlighting "What You Need" which lists access to your Wi-Fi garage door opener, Strong Wi-Fi signal inside your garage and Your Wi-Fi password. If you have access to all three listed, then proceed to the next screen by selecting "Next" at the bottom of the screen.

6. The following screen should highlight to locate the wall control. Once you located the wall control, proceed to the next step by selecting "Next" at the bottom of the screen.

7. Using the wall control follow the instructions highlighted by pressing the menu button, going to "Program" and then in the "Program" screen navigate to "WIFI Setup".

8. You should then hear a beep from your opener, if you do select follow the app instructions and tap "yes".

9. The app should then begin to "Look for devices", you should then find a device with a myQ name. The exact name will match the last few characters of the myQ serial number which can be found under the cover of the opener.

10. Once you have selected the opener, follow the remaining few prompts within the app to complete the Wi-Fi setup.

LED	Definition
Blue	**Off** - Wi-Fi is not turned on. **Blinking** - Garage door opener is in Wi-Fi learn mode. **Solid** - Mobile device connected to the garage door opener.
Blue and Green	**Blinking** - Attempting to connect to router.
Green	**Blinking** - Attempting to connect to the Internet server. **Solid** - Wi-Fi has been set up and garage door opener is connected to the Internet.

NOTES:

The myQ® Smartphone Control WILL NOT work if the garage door opener is operating on battery power.

To erase the Wi-Fi settings, see page 28.

If you need help adding devices to your myQ account or to learn more, visit gomerlin.com.au or gomerlin.co.nz and contact our customer service team.

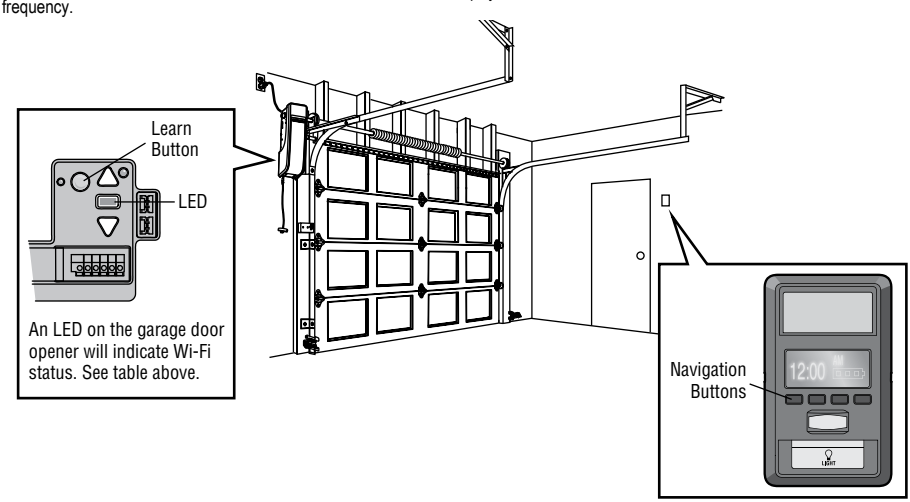

Operation

Using the Wall Control

SYNCHRONISE THE WALL CONTROL
To synchronise the wall control to the garage door opener, press the push bar until the garage door opener activates (it may take up to 3 presses). Test the wall control by pressing the push bar, each press of the push bar will activate the garage door opener.

Up to 2 Smart Control Panels or 4 of any other Security+ 2.0® wall controls can be connected to the garage door opener.

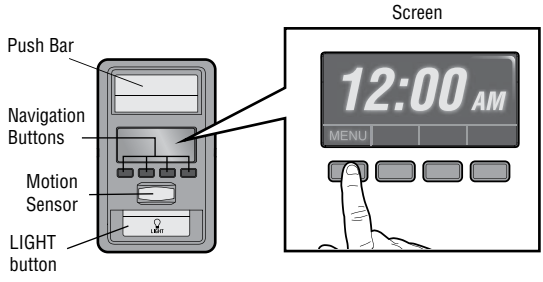

PUSH BAR
Press the push bar to open or close the door.

NAVIGATION BUTTONS
Use the navigation buttons to make selections and program features.

LIGHT BUTTON
Press the LIGHT button to turn the garage door opener lights on or off. When the lights are turned on they will stay on until the LIGHT button is pressed again, or until the garage door opener is activated. Once the garage door opener is activated the lights will turn off after the specified period of time (the factory setting is 4-1/2 minutes). The LIGHT button will not control the lights when the door is in motion.

SCREEN
The screen will display the time and temperature until the menu button is pressed, and then it will display the menu options. If there is a problem with the garage door opener the screen will display the Diagnostic Code. Refer to the Troubleshooting section.

The following features are accessible through the screen using the navigation buttons:

LEARN A DEVICE
Any compatible remote controls, wireless keyless entry, Wi-Fi garage door openers, or myQ® accessories can be programmed to the garage door opener by accessing the menu and using the navigation buttons.

LOCK
The LOCK feature is designed to prevent activation of the garage door opener from remote controls while still allowing activation from the walll control and keyless entry. This feature is useful for added peace of mind when the home is empty (i.e. vacation).

TIMER TO CLOSE (TTC)

NOTE: The Timer to Close feature requires The Protector System™ (IR Beams) to be installed.

TTC is to be used ONLY with sectional doors. Factory default is set to off. TTC can be set to automatically close your garage door from the fully open position after a specified period of time (1, 5, 10 minute intervals or a custom setting up to 99 minutes). The garage door opener will beep and the myQ smart LED garage light will flash before closing the door. The screen on the wall control can display the status of the TTC. TTC WILL NOT work if the garage door opener is operating by battery power or if the safety reversing sensors are misaligned. This feature is NOT intended to be the primary method of closing the door. **A keyless entry should be installed in the event of an accidental lock out when using this feature.**

TTC can be temporarily disabled by pressing the HOLD button on the wall control while TTC is active.

***NOTE**: Before enabling the TTC for the first time, or if you experience a power outage, cycle the garage door opener open and closed to allow the TTC to set.*

AUTOMATIC LIGHT

Motion Sensor
Factory default is set to on. This feature automatically turns on the garage door opener lights when motion is sensed. The myQ smart LED garage light will come on for the set period of time, then shut off. If using the myQ smart LED garage light as a work light disable the motion sensor, otherwise the light will turn off automatically if you are beyond the range of the sensor.

Light Feature
The myQ smart LED garage light will turn on when someone enters through the open garage door and the safety reversing sensor infrared beam is broken.

MAINTENANCE ALERT (MAS)
This feature assists the homeowner in ensuring the garage door opener system stays in good working condition. When the garage door opener needs to be serviced (approximately 4500 garage door opener cycles) the command (yellow) and service (red) LEDs will begin to alternately flash back and forth. The factory setting for the MAS feature is off and can be activated at time of installation. Contact your installing dealer for service.

Operation

SETUP

The features on the wall control can be programmed through a series of menus on the screen and the navigation buttons.
Refer to the descriptions below.

SCREEN

The main screen displays the time, temperature, and current battery charge (if applicable)

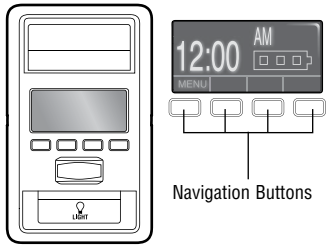

FEATURES

Press the navigation button below "MENU" to view the Features menu.

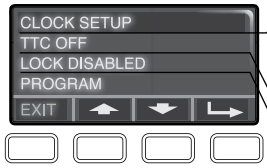

Set the time, choose 12 or 24 hour clock and show/hide clock.

For sectional doors ONLY. Set the Timer to Close (TTC) feature off/on and set the time interval before door closes. **NOTE:** TTC is to be used ONLY with sectional doors.

Enable/disable lock.

Set up Wi-Fi*, add remote controls, myQ devices, an extra remote button to control your garage door opener lights, or a keyless entry.

* The garage door opener must run through a complete cycle before it will activate Wi-Fi programming.

SETTINGS

Press the navigation button below the down arrow till you see TEMPERATURE to view the Settings menu.

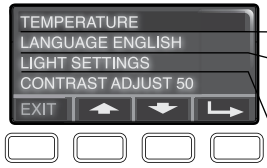

Display the temperature in Fahrenheit or Celsius and show/hide the temperature.

Select a language.

Set duration for garage door opener light to stay on after operation, selectable range of 1-1/2 to 4-1/2 minutes. Turn the Motion sensor off/on, and turn the entry light feature off/on.

Adjust the contrast of the screen.

SERVICE

Press and hold the LIGHT button, then press the second navigation button to view the Service menu.

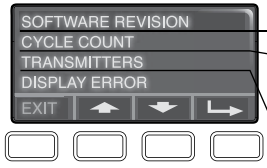

Displays software version information.

Turn the Maintenance Alert (MAS) on/off.

Displays the number of remote controls, myQ devices, wall controls and keyless entries currently programmed to operate the garage door opener.

Displays any errors that have occurred.

To program a remote control or keyless entry to the garage door opener using the wall control, see page 26

Programming

E975M Four Button Remote Control

Your remote control has been programmed at the factory to operate with your garage door opener. If the remote does not work or you would like to program additional devices, follow the programming steps below.

Up to 40 Security+ 2.0® remote controls can be programmed to the garage door opener.
Older Merlin remote controls are NOT compatible, see page 33 for compatible accessories.
Programming can be done through the wall control or the learn button on the garage door opener.
To program additional accessories refer to the instructions provided with the accessory or visit gomerlin.com.au or gomerlin.co.nz.

TO ADD, REPROGRAM, OR CHANGE AN E975M FOUR BUTTON REMOTE CONTROL/E840M KEYLESS ENTRY PIN USING THE WALL CONTROL

1. Press the navigation button below "MENU" to view the Features menu.
2. Use the navigation buttons to scroll to "PROGRAM".
3. Select "REMOTE" or "KEYPAD" to program from the program menu.
4. **Remote Control:** Press the button on the remote control that you wish to operate your garage door.

   Keyless Entry: Enter a 4-digit personal identification number (PIN) of your choice on the keyless entry keypad. Then press the ENTER button.

The myQ smart LED garage light will flash (or two clicks will be heard) when the code has been programmed. Repeat the steps above for programming additional remote controls or keyless entry devices. If programming is unsuccessful, program the remote using the learn button.

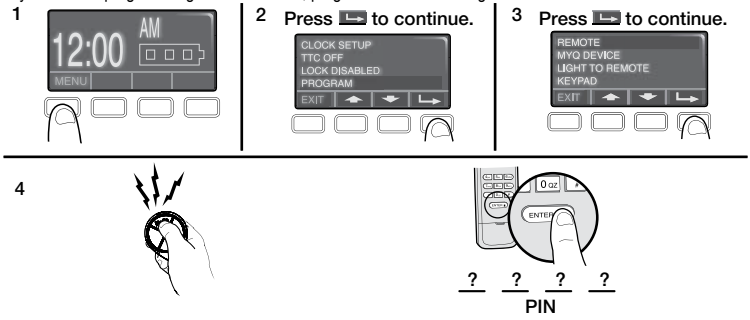

PROGRAM AN E975M FOUR BUTTON REMOTE CONTROL USING THE LEARN BUTTON ON THE GARAGE DOOR OPENER

1. Press and hold the remote control button you wish to use.
2. Press and release the yellow Learn button on the garage door opener.
3. Release the remote control button when the opener beeps to confirm the remote control has been learned. The myQ Smart LED garage light (if installed) will flash once.

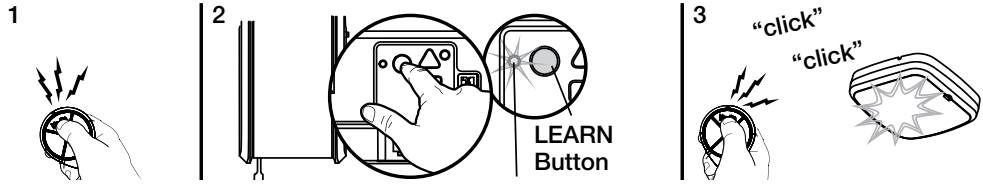

To program other types of remote controls or keyless entries see the instructions included with the device or visit gomerlin.com.au or gomerlin.co.nz.

Programming

Program the myQ Smart LED Garage Light

Your garage door opener remote light has already been programmed at the factory to operate with your opener. Any additional or replacement remote lights will need to be programmed.

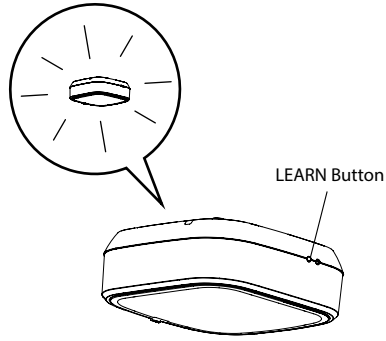

PROGRAM A DOOR OPENER TO THE myQ Smart LED Garage Light

1. Press the LEARN button on the light until the green LED comes ON.
2. Press the LEARN button on the door opener. ***OR***
   On the Smart Control Panel go to Menu > Program > myQ Device.
3. The code has been programmed when the remote light blinks once.

PROGRAM A REMOTE CONTROL TO THE myQ Smart LED Garage Light

1. Press the LEARN button on the light until the green LED comes ON.
2. Press the button on the remote control that you wish to operate the light.
3. The code has been programmed when the remote light blinks once.

To program the light with other accessories, refer to the manual for your accessory.

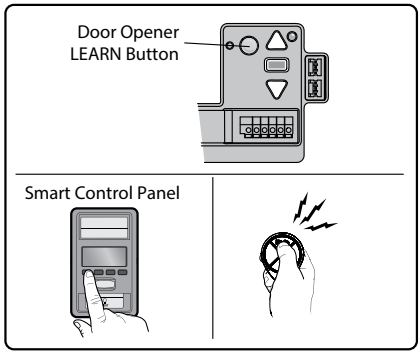

ADD THE myQ Smart LED Garage Light TO myQ ACCOUNT

1. Press the LEARN button on the light until the green LED comes ON.
2. Login to the myQ app and add the myQ Smart LED Garage Light.

TO ERASE ALL PROGRAMMING FROM THE myQ Smart LED Garage Light

1. Press and hold the LEARN button until the LED turns off (6-10 seconds). All programming is now erased.

To Erase the Memory

ERASE ALL REMOTE CONTROLS AND KEYLESS ENTRIES

1. Press and hold the LEARN button on garage door opener until the learn LED goes out (approximately 6 seconds). All remote control and keyless entry codes are now erased. Reprogram any accessory you wish to use.

ERASE ALL DEVICES (Including myQ enabled accessories)

1. Press and hold the LEARN button on garage door opener until the learn LED goes out (approximately 6 seconds).
2. Immediately press and hold the LEARN button again until the learn LED goes out. All codes are now erased. Reprogram any accessory you wish to use.

ERASE THE WI-FI NETWORK FROM THE GARAGE DOOR OPENER

1. Press and hold the black adjustment button on the garage door opener until 3 beeps are heard (Approximately 6 seconds).

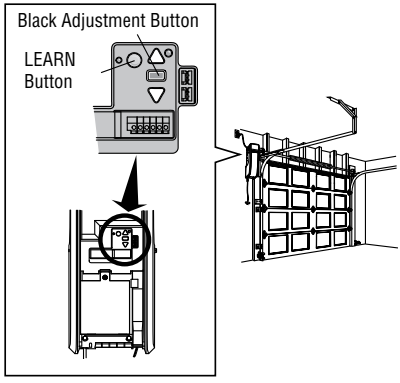

Maintenance

Care of Your Garage Door Opener

MAINTENANCE SCHEDULE

EVERY MONTH

- Manually operate door. If it is unbalanced or binding, call a trained door systems technician.
- Check to be sure door opens and closes fully. Adjust limits if necessary (see Adjustment Step 1).
- Repeat the safety reversal test. Make any necessary adjustments (see Adjustment Step 2).

EVERY YEAR

- Oil door rollers, bearings and hinges. The garage door opener does not require additional lubrication. Do not grease the door tracks.

DURING THE THIRD AND FIFTH YEARS AFTER PRODUCT IS INSTALLED

- Ensure the garage door and the door opener is professionally maintained and serviced by a Professional Dealer, at a minimum, during the third and fifth years of the Chamberlain Limited Warranty period such that the spring balanced door operates according to manufacturer specifications. If your door binds, sticks, or is out of balance, then it must not be used until serviced by a trained door technician or Professional Dealer. The garage door service fee will be at the purchaser's expense.

myQ Smart LED Garage Light

- Unplug the light before cleaning.
- Use a lightly dampened cloth for cleaning.
- DO NOT use liquid cleaners on the light lens.

THE REMOTE CONTROL BATTERY

The LED(s) on your remote control will stop flashing when the battery is low and needs to be replaced.
To replace battery, open the case as shown. Insert battery positive side up (+).
Replace the battery with only 3V CR2032 coin cell batteries. Dispose of old battery properly.

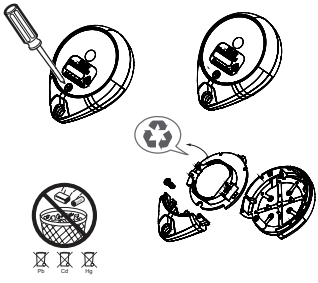

⚠ WARNING



The wireless transmitters contain button/coin cell batteries.

- ***The battery is hazardous.***
- ***Keep new and used batteries away from children.***
- ***Do not ingest battery. Chemical burn hazard.***
- ***If the coin cell battery is swallowed or placed inside any part of the body, it can cause severe or fatal injuries in 2 hours or less.***
- ***If the battery compartment does not close securely, stop using the product and keep away from children.***
- ***If you think batteries might have been swallowed or placed inside any part of the body, call the 24-hour Poisons Information Centre on 13 11 26 in Australia, or the 24-hour National Poisons Centre on 0800 764 766 in New Zealand, or seek immediate medical attention.***
- ***Dispose of used coin/button cell batteries immediately and safely. Flat batteries can still be dangerous.***

Troubleshooting

Diagnostic Chart

Your garage door opener is programmed with self-diagnostic capabilities. The UP and DOWN arrows on the garage door opener flash the diagnostic codes.

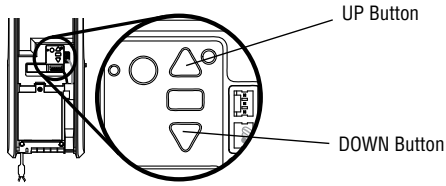

DIAGNOSTIC CODE Up Arrow Flash(es)	Down Arrow Flash(es)	SYMPTOM	SOLUTION
1	1	The garage door opener will not close and the light flashes.	The Protector System™ are not installed, connected or wires may be cut. Inspect sensor wires for a disconnected or cut wire.
1	2	The garage door opener will not close and the light flashes.	There is a short or reversed wire for the the Protector System™ . Inspect safety sensor wire at all staple points and connection points and replace wire or correct as needed.
1	3	The wall control will not function.	The wires for the wall control are shorted or the wall control is faulty. Inspect wall control wires at all staple points and connection points and replace wire or correct as needed.
1	4	The garage door opener will not close and the light flashes.	The Protector System™ are misaligned or were momentarily obstructed. Realign both sensors to ensure both LEDs are steady and not flickering. Make sure nothing is hanging or mounted on the door that would interrupt the sensors path while closing.
1	5	Door moves 15-20 cm stops or reverses.	Manually open and close the door. Check for binding or obstructions, such as a broken spring or door lock, correct as needed. Check wiring connections at travel module (APE) and at the logic board. Replace travel module (APE) if necessary.
		No movement, only a single click.	Manually open and close the door. Check for binding or obstructions, such as a broken spring or door lock, correct as needed. Replace logic board if necessary.
		Opener hums for 1-2 seconds no movement.	Manually open and close the door. Check for binding or obstructions, such as a broken spring or door lock, correct as needed. Replace motor if necessary.
1	6	Door coast after it has come to a complete stop.	Program travel to coasting position or have door balanced by a trained technician.
2	1-5	No movement or sound.	Replace logic board.
3	1	The garage door opener moves slightly, then stops	Activate the garage door opener again. If problem persists, replace logic board.
3	3	The battery status LED is constantly flashing green.	Battery backup charging circuit error, replace logic board.
3	5	The garage door opener will not close or door reverses during travel.	• Check for possible door obstructions and remove. • Check that the cable tension monitor is properly connected to the opener. • Replace the cable tension monitor. If two cable tension monitors were previously installed and one has been removed, unplug and plug in the opener three times to relearn the monitor to the opener.
4	1-4	Door is moving stops and or reverses.	Manually open and close the door. Check for binding or obstructions, such as a broken spring or door lock, correct as needed. If the door is binding or sticking contact a trained door systems technician. If door is not binding or sticking attempt to reprogram travel.
4	5	Opener runs approximately 15-20 cm, stops and reverses.	Communication error to travel module (APE). Check travel module (APE) connections, replace module if necessary.
4	6	The garage door opener will not close and the light flashes.	The Protector System™ are misaligned or were momentarily obstructed. Realign both sensors to ensure both LEDs are steady and not flickering. Make sure nothing is hanging or mounted on the door that would interrupt the sensor's path while closing.
5	2	No movement or sound.	Check Door-in-door factory installed loop wire on terminals 6 & 7.
5	5	The door will not close when using Timer-to-Close or myQ Smartphone Control	myQ Smart LED Garage Light must be installed to use TTC or myQ to control the door. Plug in the myQ Smart LED Garage Light and make sure it is programmed to the garage door opener.

Troubleshooting

Additional Troubleshooting

The garage door opener doesn't operate from either the wall control or the remote control:

- Does the garage door opener have mains power? Plug a lamp into the outlet. If it doesn't light, check the fuse box or the circuit breaker. (Some outlets are controlled by a wall switch.)
- Is the opener running on Battery back Up? Check the Control Panel for the BBU diagnostic LED. Refer page 19.
- Have you disabled all door locks? Review installation instruction warnings on page 11.
- Are the wiring connections correct? Review Installation Step 5.
- Is there a build-up of ice or snow under the door? The door may be frozen to the ground. Remove any restriction.
- The garage door spring may be broken. Have it replaced (see page 4 for reference).

The door opener operates from the single button control station, but not from a remote control:

- Reprogram the remote control and replace the battery if necessary. Repeat with all remote controls.

The door opens and closes by itself:

- Be sure that all remote control push buttons are off.
- Remove the bell wire from the single button control station terminals and operate from the remote only. If this solves the problem, the single button control station is faulty, or there is an intermittent short in the wire. Replace the control station.
- Erase the memory and reprogram all remote controls (refer to the instructions provided with the remote control or visit gomerlin.com.au or gomerlin.co.nz).

My remote control will not activate the garage door:

- Verify the lock feature is not activated on the wall control.
- Reprogram the remote control.
- If the remote control will still not activate the door check the diagnostic codes to ensure the garage door opener is working properly.

The remote control has short range:

- Change the location of the remote control in your car.
- Some installations may have shorter range due to a metal door, foil backed insulation, or metal garage siding.

The door doesn't open completely:

- Check power door lock.
- Is something obstructing the door? Is it out of balance, or are the springs broken? Remove the obstruction or repair the door.

The door opens but won't close:

- Check that cable tension monitor is correctly installed. If a second cable tension monitor has been removed, follow the instructions to relearn a single cable tension monitor (See Installation Step 4).
- The Protector System™ must be connected and aligned correctly before the door opener will move in the down direction. If you are able to close the door using constant pressure, verify the Protector System™ is properly installed, aligned and free of any obstructions (see page 15).
- If the garage door opener lights blink, check the Protector System™ (see page 15).
- If the garage door opener lights don't blink and it is a new installation see Adjustment Step 1. For an existing installation, see below.

Repeat the safety reverse test after the adjustment is complete.

The door reverses for no apparent reason and garage door opener lights don't blink:

- Check that cable tension monitor is correctly installed. If a second cable tension monitor has been removed, follow the instructions to relearn a single cable tension monitor (See Installation Step 4).
- Is something obstructing the door? Pull the emergency release handle. Operate the door manually. If it is unbalanced or binding, call a trained door systems technician.
- Clear any ice or snow from the garage floor area where the door closes.
- Review Adjustment Step 1.

Repeat safety reverse test after adjustments.

My door will not close and the light blinks:

- The Protector System™ must be connected and aligned correctly before the garage door opener will move in the down direction.
- Verify the the Protector Sustem™ is properly installed, aligned and free of any obstructions.

The garage door opener strains to operate door:

- The door may be out of balance or the springs may be broken. Close the door and use the emergency release handle to disconnect the door. Open and close the door manually. A properly balanced door will stay in any point of travel while being supported entirely by its springs. If it does not, disconnect the garage door opener and call a trained door systems technician.

The garage door opener motor hums briefly, then won't work:

- Check the emergency manual release has not been activated. Can the door be lifted manually? If so, pull the red emergency release handle to re-engage the drive system.
- The garage door springs may be broken. See above.
- If the problem occurs on the first operation of the garage door opener, door may be locked. Disable the power door lock.

Troubleshooting

Additional Troubleshooting (Continued)

The garage door opener won't operate due to power failure:

- Manually open the power door lock.
- Use the emergency release handle to disconnect the door. The door can be opened and closed manually. When power is restored, pull manual release a second time.
- Disable any door locks. Use the emergency release handle to disconnect the door. The door can be opened and closed manually. When power is restored, pull manual release a second time.

Door loses limits:

- Collar not tightened securely. Tighten collar and reprogram limits (see Adjustment Step 1).

The garage door opener moves when the door is in operation:

- Some minor movement is normal for this product. If it is excessive the collar will wear prematurely.
- Check to make sure the torsion bar is not moving left/right excessively.
- Check to make sure the torsion bar is not visibly moving up and down as it rotates.
- Check that the opener is mounted at a right angle to the jackshaft. If not, move the position of the mounting bracket.

Automatic door lock connector will not fit the door opener plug:

- Older model 24V door locks are incompatible. Use automatic door lock model 841ANZ, see Accessories page

Automatic garage door lock does not activate when garage door opens or closes:

- In battery backup mode, the automatic garage door lock will unlock when the garage door is opened, and will remain disabled until power is restored.

The door opener is beeping:

- Indicates unattended closure. The opener has been activated by the myQ App.
- A solid orange LED with beep, sounding approximately every 2 seconds, indicates the door opener is operating on battery power.
- A flashing orange LED with beep, sounding every 30 seconds, indicates the battery is low.
- A solid red LED with beep, sounding every 30 seconds, indicates the 12V battery will no longer hold a charge and needs to be replaced.

The garage door is beeping and the red LED is flashing:

- The battery charge is low or the battery is dead.
- Replace the battery.

myQ® Smartphone Control, wireless myQ® devices, and Timer-To-Close will not work:

- When in Battery Backup mode, myQ® Smartphone Control, wireless myQ® devices and Timer-To-Close will be disabled.
- myQ Smart LED Garage Light must be installed to enable use of Timer-to-Close or myQ Smartphone Control of the door. Plug in the myQ Smart LED Garage Light and make sure it is programmed to the garage door opener. It may take up to 5 minutes to enable Timer-to-Close and myQ Smartphone Control.

Repair Parts

Installation Parts

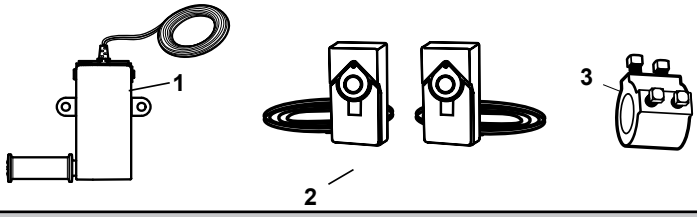

KEY NO.	PART NO.	DESCRIPTION	KEY NO.	PART NO.	DESCRIPTION
1	041A9264	Cable tension monitor	3	041D8615	Collar with set screws
2	774ANZ	The Protector System™ kit (receiving and sending sensors) with 2-conductor bell wire attached			**NOT SHOWN**
				114A5163	User's Guide
				114A5164	Quick Start Guide

Repair Parts

Garage Door Opener Assembly Parts

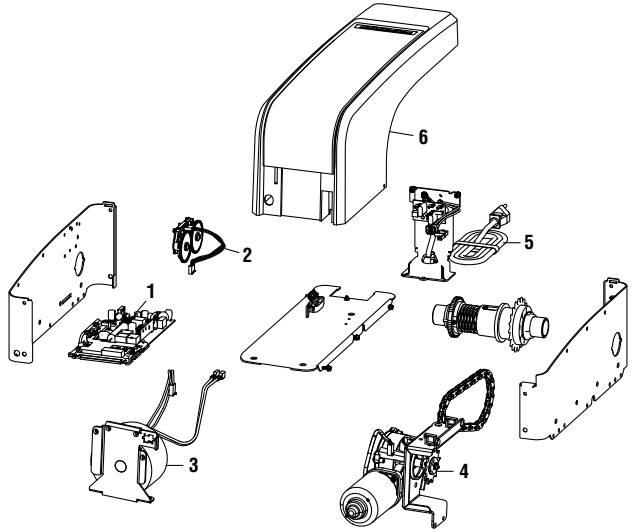

KEY NO.	PART NO.	DESCRIPTION	KEY NO.	PART NO.	DESCRIPTION
1	050DCANZRJWF	Logic Board	4	041D1624-2	Motor
2	041B9221	Travel module (APE) with Wire Harness	5	041D0193	Power cord
3	041C0297	Transformer	6	041D9250	Housing/door service kit

Accessories

E840M

Wireless Keyless Entry:

For use outside of the home to enable access to the garage using a 4-digit PIN.

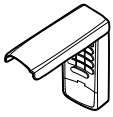

E964M

3-Button Remote Control:

Includes visor clip.



E980M

4-Button Remote Control:

Waterproof remote control.



E148M

4-Button Wireless Wall Mount Remote Control:

Wall mount remote control



E960M

4-Button Premium+ Remote Control:

Remote control.



837AU

myQ Smart LED Garage Light

Remote control light that can program to the door opener or a remote control.



STANDARD ACCESSORIES

GPS15

Monitored Reflective PE Beam



041A6357-2

Battery Backup:

Provides backup power to the door opener.



041A9264

Cable Tension Monitor:

Cable tension monitor with 10m cord.



841ANZ

Automatic Door Lock:

The automatic door lock is used to prevent the door from being manually opened once the door is fully closed.

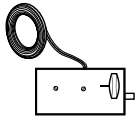

DON'T FORGET

Warranty Registration

To validate your warranty you must complete the registration form online at:

gomerlin.com.au/warranty
or
gomerlin.co.nz/warranty

Merlin®
Powering Garage Doors

Get Connected with myQ®

The Protector System (Safety IR Beams) must be installed to enable the myQ connectivity function

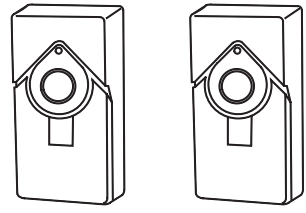

Visit www.gomerlin.com.au or www.gomerlin.co.nz for more details.

Download on the App Store GET IT ON Google Play

Wi-Fi® is a registered trademark of Wi-Fi Alliance.
App Store is a service mark of Apple Inc.
Google Play is a trademark of Google Inc.
© 2024 The Chamberlain Group LLC
All Rights Reserved

Limited Warranty in Australia and New Zealand
Merlin® Commander Ultimate MJ3800MYQ
Garage Sectional Door Opener

1 Your consumer rights and guarantees

This Limited Warranty is provided by Chamberlain Australia Pty Ltd, Chamberlain New Zealand Limited (Chamberlain), contact details in Section 5 below. This Limited Warranty applies to the Merlin ® Commander Ultimate MJ3800MYQ unit (Unit) purchased in Australia and New Zealand, and gives you benefits which are in addition to your consumer rights and remedies under the Australian Consumer Law (or corresponding New Zealand consumer protection laws).

You can find out more information about your consumer rights and guarantees which the law provides in Australia at www.accc.gov.au, in New Zealand at www.consumerprotection.govt.nz. We also provide this statement as required under the Australian Consumer Law:

Our goods come with guarantees that cannot be excluded under the Australian Consumer Law. You are entitled to a replacement or refund for a major failure and for compensation for any other reasonably foreseeable loss or damage. You are also entitled to have the goods repaired or replaced if the goods fail to be of acceptable quality and the failure does not amount to a major failure.

2 What does our Limited Warranty cover?

Chamberlain warrants that, when purchased new in Australia or New Zealand, the Unit (all parts of the Unit other than globes and batteries) is free from defects in materials and workmanship (Limited Warranty) for the Limited Warranty period, subject to the terms and conditions of this Limited Warranty.

The Limited Warranty period (for Accessories see below) is 7 years (84 months) or 15,000 cycles (each opening and closing of the garage door equals 1 cycle) whichever comes first, from the date of purchase of the Unit when installed by a Professional Dealer authorised by Chamberlain in residential premises with a residential specified garage door that is designed for the sole purpose of a single-family dwelling.

The Limited Warranty period for remote controlled transmitters and accessories included with the Unit (Accessories) is 12 months from the date of purchase.

3 Limited Warranty Conditions

The following terms and conditions apply to your Limited Warranty:

- our Limited Warranty is effective from date of purchase as indicated in Section 2 above;
- proof of purchase of the Unit is required;
- purchaser must ensure the garage door is serviced by a Chamberlain authorised dealer or qualified technician during the period 24 to 36 months and 60 to 72 months after the date of purchase. If your door binds, sticks, or is out of balance, then it must not be used until serviced by a Chamberlain authorised dealer or qualified technician . The garage door service fee will be at the purchaser's expense.

Please also see the User Manual for the Unit available on our website, or provided at the time of purchase.

4 What is not covered

- Batteries and globes are not covered under the Chamberlain Limited Warranty.
- Travel costs incurred by Chamberlain or its authorised dealer in either travelling to and from areas outside a capital city area. These costs will be at the purchaser's expense.
- Additional access costs incurred by Chamberlain or its authorised dealer in obtaining access to premises where the Unit is not readily accessible. These costs will be at the purchaser's expense.

Our Limited Warranty covers defects as explained, and does not cover all problems and mishaps that may occur in relation to the Unit including:

- when the unit is not installed within outlined specification for that unit or as outlined within the user manual.
- you got what you asked for but simply changed your mind, found it cheaper somewhere else, decided you did not like the purchase or had no use for it;
- you misused the Unit in any way that caused the problem;
- you knew of or were made aware of any deficiencies with the Unit before date of purchase;
- use of the Unit with controls or third party devices or software which has not been supplied, or pre-approved, by Chamberlain;
- problems relating to or residing in third party hardware, software or other items with which our product is used;

- any loss of data related to you or provided by you, or loss related to downtime associated with use of the product, whether through power outage, failure of internet or wireless connectivity, network disruptions, or otherwise;
- non-compliance with the relevant instructions in the User Manual;
- tampering, neglect, abuse, wear and tear, accident, electrical storm, excessive use or conditions other than normal use;
- problems with, or relating to, the garage door or garage door hardware, including but not limited to the door springs, door rollers, door alignment, hinges, guides, slats and drums;
- problems caused by electrical faults or replacement of batteries or light bulbs, blown fuses, electrical surges, power surges or power strikes, fire, flood, rain, water, lightning or storms;
- water or moisture ingress that causes corrosion or electrical malfunction;
- corrosion caused by sea air if located near a waterway, beach etc;
- fitment to a commercial door or in a commercial operating application, installation of a residential garage door opener in a commercial or industrial premises other than a single-family dwelling;
- lack of proper maintenance, service or care of the door and/or Unit; and/or
- damage caused by insects, pests or other after sale damage caused by events or accidents outside Chamberlain's reasonable control and not arising under normal and standard operating conditions.

5 Where you need help with our product

If you have a problem with the Unit or if you are concerned it may be defective, please contact our Customer Service team below:

Australia	Phone toll free 1800 638 234	**New Zealand**	Phone toll free 0800 653 667
Fax toll free	1800 888 121	Auckland	Phone 09 477 2823
Address	Unit 1, 75 Epping Road North Ryde, NSW 2113	Fax toll free	0800 653 663
Email	**customerservice@chamberlainanz.com**	Email	**customerservice@chamberlainanz.com**
Website	**www.gomerlin.com.au**	Website	**www.gomerlin.co.nz**

As a first step, our Customer Service team will provide product support assistance to help you try to resolve the problem and in some cases, replacement parts for "do it yourself repairs". If our technical team need to see the product to determine the nature of the fault, we will arrange an inspection by an experienced technician, or ask that you send the product to us.

If your product was installed at your premises by an authorised installer, please contact the installer indicated in your sales documents for prompt on-site service, or consult our Customer Service team if you need help in finding a local service technician. A service fee for on-site service may apply.

Authorisation from Chamberlain is required for warranty service under this Limited Warranty.

6 Delivery Charges

If an inspection is required in order to determine the nature of the fault, please send the Unit freight paid and well packaged in accordance with our instructions. Any costs associated with transporting the Unit will be at Chamberlain's cost if the Unit has breached a statutory consumer guarantee. Repairs and replacement parts provided under this Limited Warranty are free of charge (and repaired items or replacement parts for Units found to be defective will be returned to you at our cost), and warranted by Chamberlain for the remaining portion of the original warranty period. However, if you make a claim under this Limited Warranty, and this Limited Warranty does not apply, or if the law does not provide you with a statutory right or remedy as a consumer, you may be required to pay labour, assessment and/or freight costs and delivery charges to repair, replace and/or return the Unit to you.

7 How to register your product

Please register your Unit and contact details at this link www.gomerlin.com.au/warranty-registration/ for Australia, or www.gomerlin.co.nz/register-your-warranty/ for New Zealand, so that we or your authorised installer can locate your details and provide you with product support assistance as quickly as possible, and keep you up to date with product updates. Registration can also be done by contacting Chamberlain Customer Service.

8 Important Reminder

All other guarantees (other than your statutory rights and guarantees as a consumer under applicable laws) are excluded to the fullest extent that we may lawfully do so. Unless the law requires us to do so, we do not accept any other liability, such as compensation for damages, injury or loss.